Draft Project Report

I-10 Corridor Project

ATTACHMENT D

Conceptual Layouts

ALTERNATIVE 2

Dist	COUNTY	ROUTE	POST MILES TOTAL PROJECT	SHEET No.	TOTAL SHEETS
08	SBd	10	4.7/R37.0		

INDEX OF PLANS

STATE OF CALIFORNIA
DEPARTMENT OF TRANSPORTATION

PROJECT PLANS FOR CONSTRUCTION ON
STATE HIGHWAY

IN SAN BERNARDINO COUNTY
FROM 0.2 MILE WEST OF GROVE AVENUE UNDERCROSSING
TO LIVE OAK CANYON ROAD OVERCROSSING

NOTE:

1. THE TABLE OF IDENTIFICATION OF PROJECT STRUCTURES IS SHOWN ON THE IDENTIFICATION OF PROJECT STRUCTURES SHEET.

TO BE SUPPLEMENTED BY STANDARD PLANS DATED 2010

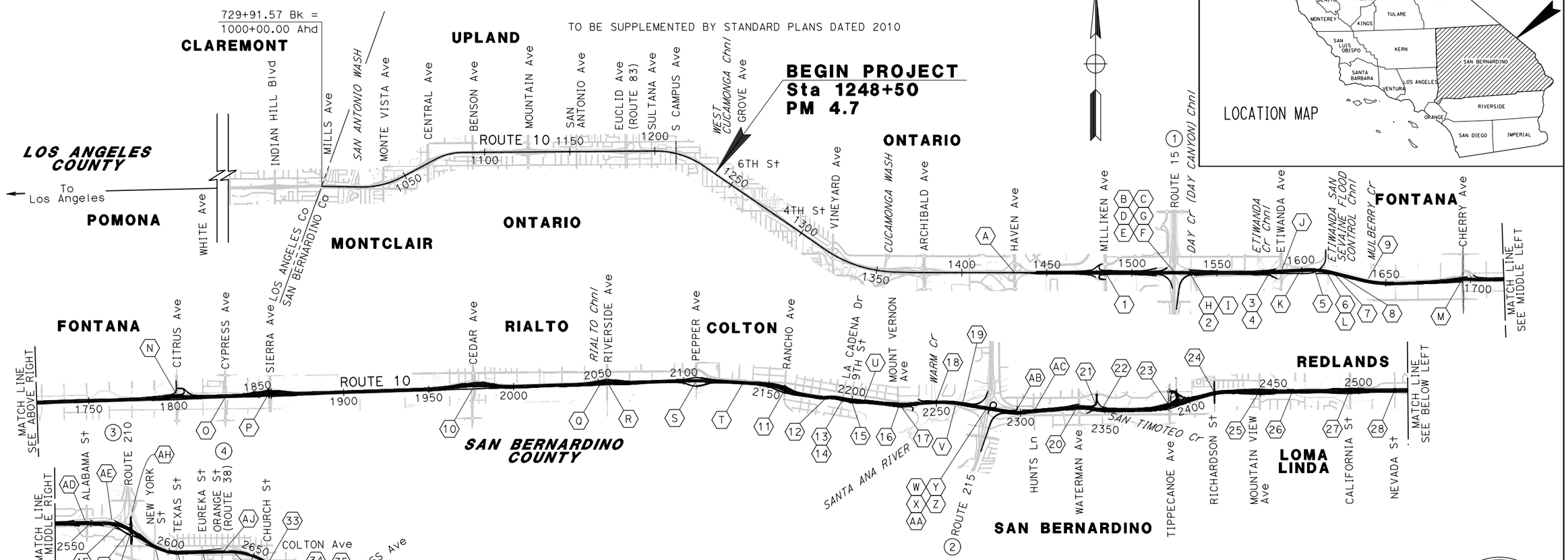

THE CONTRACTOR SHALL POSSESS THE CLASS (OR CLASSES) OF LICENSE AS SPECIFIED IN THE "NOTICE TO BIDDERS."

I-10 CORRIDOR PROJECT
ALTERNATIVE 2 - HOV

NO SCALE

LIMITS OF WORK ON INTERSECTING ROUTES

No. (X)	ROUTE	LIMITS OF WORK FROM	LIMITS OF WORK TO
1	15	PM 0.7	PM 4.0
2	215	PM 2.1	PM 5.7
3	210	PM R33.0	PM R31.5
4	38 (ORANGE Ave)	PM 0.0	PM 0.3

PROJECT ENGINEER DATE
REGISTERED CIVIL ENGINEER

REGISTERED PROFESSIONAL ENGINEER No. Exp. CIVIL STATE OF CALIFORNIA

PLANS APPROVAL DATE

THE STATE OF CALIFORNIA OR ITS OFFICERS OR AGENTS SHALL NOT BE RESPONSIBLE FOR THE ACCURACY OR COMPLETENESS OF SCANNED COPIES OF THIS PLAN SHEET.

PARSONS
2201 DUPONT DRIVE, SUITE 200
IRVINE, CA 92612

SAN BERNARDINO ASSOCIATED GOVERNMENTS
1170 W. 3RD STREET
SAN BERNARDINO, CA 92410

CONTRACT No. **08-0C2500**

PROJECT ID **0800000040**

APPROVED AS TO IMPACT ON STATE FACILITIES AND CONFORMANCE WITH APPLICABLE STATE STANDARDS AND PRACTICES AND THAT TECHNICAL OVERSIGHT WAS PERFORMED.

CONSULTANT DESIGN ENGINEER | CALTRANS DESIGN OVERSIGHT APPROVAL | REGISTRATION No. | LICENSE Exp DATE | DATE SIGNED

LAST REVISION 00-00-00 | DATE PLOTTED => 1/5/2016 | TIME PLOTTED => 3:57:51 PM

Dist	COUNTY	ROUTE	POST MILES TOTAL PROJECT	SHEET No.	TOTAL SHEETS
08	SBd	10	4.7/R37.0		

REGISTERED CIVIL ENGINEER DATE

PLANS APPROVAL DATE

REGISTERED PROFESSIONAL ENGINEER No. Exp. CIVIL STATE OF CALIFORNIA

THE STATE OF CALIFORNIA OR ITS OFFICERS OR AGENTS SHALL NOT BE RESPONSIBLE FOR THE ACCURACY OR COMPLETENESS OF SCANNED COPIES OF THIS PLAN SHEET.

PARSONS
2201 DUPONT DRIVE
SUITE 200
IRVINE, CA 92612

SAN BERNARDINO
ASSOCIATED GOVERNMENTS
1170 W. 3RD STREET
SAN BERNARDINO, CA 92410

IDENTIFICATION OF PROJECT STRUCTURES

Loc No. (X)	BRIDGE No.	STRUCTURE NAME
1	54-0539	MILLIKEN Ave OC
2	54-0351	DAY CANYON Chnl Br
3	54-0378L/R	ETIWANDA WASH Br
4	54-0378S	ETIWANDA WASH Br (EB OFF-RAMP)
5	54-0030L/R	VALLEY Blvd EB OFF-RAMP UC
6	54-0454L/R	ETIWANDA-SAN SEVAINE Chnl
7	54-0416	KAISER SPUR OH
8	54-0434	SAN SEVAINE Cr Chnl BOX CULVERT
9	54-0425M	MULBERRY Cr Chnl BOX CULVERT
10	54-0035	CEDAR Ave OC
11	54-0817	RANCHO Ave OC
12	54-0464L/R	COLTON OH
13	54-0462	LA CADENA Dr UC
14	54-0462S*	LA CADENA Dr UC (EB OFF-RAMP)
15	54-0461	NINTH St UC
16	54-0460**	PAVILION SPUR OH
17	54-0459	MOUNT VERNON Ave OC
18	54-0830L/R	WARM Cr Br
19	54-0292L/R	SANTA ANA RIVER Br
20	54-0600	WATERMAN Ave UC
21	54-1105K	SAN TIMOTEO Cr (CARNEGIE Dr WB ON-RAMP)
22	54-0599	SAN TIMOTEO Cr
23	54-0598	TIPPECANOE Ave UC
24	54-0597*	RICHARDSON St OC
25	54-0596	MOUNTAIN VIEW Ave UC
26	54-0570	WEST REDLANDS OH/MISSION Chnl
27	54-0595	CALIFORNIA St UC
28	54-0594	NEVADA St UC
29	54-0592*	TENNESSEE St OC
30	54-0583	TEXAS St UC
31	54-0580	EUREKA St UC
32	54-0579	SIXTH St UC
33	54-0578	CHURCH St UC
34	54-0472	MILL Cr ZANJA Chnl REDLANDS OH
35	54-0582	UNIVERSITY St UC
36	54-0584	CITRUS Ave UC
37	54-0585	CYPRESS Ave UC
38	54-0586	PALM Ave UC
39	54-0587	HIGHLAND Ave UC
40	54-0588	FORD St UC
41	54-0589	REDLANDS Blvd WB OFF-RAMP UC

* REPLACEMENT STRUCTURE WILL BE ASSIGNED A NEW BRIDGE No.

** RAILROAD FACILITY IS NO LONGER IN SERVICE; STRUCTURE COULD BE WIDENED OR ABANDONED IN PLACE BY FILLING WITH EARTH MATERIAL.

IDENTIFICATION OF EXISTING STRUCTURES (NO WORK BEING PERFORMED)

Loc No. (X)	STRUCTURE NAME
A	HAVEN Ave OC
B	E10-N15 Conn OC
C	N15-W10 Conn OC
D	W10-S15 Conn OC
E	Rte 15/10 Sep
F	S15-E10 Conn OC
G	W10-S15 Conn OC
H	W10-S15 Br OVER DAY CANYON
I	W10-N15 Br OVER DAY CANYON
J	ETIWANDA Ave OC
K	VALLEY Blvd WB ON-RAMP Sep
L	ETIWANDA-SAN SEVAINE Chnl (EB ON-RAMP)
M	CHERRY Ave OC
N	CITRUS Ave OC
O	CYPRESS Ave OC
P	SIERRA Ave OC
Q	RIALTO Chnl RCB Br
R	RIVERSIDE Ave OC
S	PEPPER Ave OC
T	SLOVER MOUNTAIN UP
U	PAVILLION OH (NINTH St WB OFF-RAMP)
V	SANTA ANA RIVER (E10-N/S215)
W	E10-N215 Conn OC
X	S215-E10 Conn OC
Y	Rte 215/10 Sep
Z	W10-N215 Conn OC
AA	W10-S215 Conn OC
AB	E St/SUNWEST Ln WB ON-RAMP UC
AC	HUNTS Ln UC
AD	ALABAMA St OC
AE	E210-W10/ALABAMA St WB OFF-RAMP UC
AF	E10-W210 Conn OC
AG	E210-E10 Conn OC
AH	W10-W210 OVER TENNESSEE St UC
AI	NEW YORK St/COLTON Ave UC
AJ	ORANGE St UC (Rte 10/38 Sep)

I-10 CORRIDOR PROJECT
ALTERNATIVE 2 - HOV

IDENTIFICATION OF PROJECT STRUCTURES

IPS-1

REVISED BY | DATE REVISED
CALCULATED-DESIGNED BY | CHECKED BY
CONSULTANT FUNCTIONAL SUPERVISOR
STATE OF CALIFORNIA - DEPARTMENT OF TRANSPORTATION
Caltrans

LAST REVISION 00-00-00 | DATE PLOTTED => 1/5/2016 | TIME PLOTTED => 3:58:01 PM

Dist	COUNTY	ROUTE	POST MILES TOTAL PROJECT	SHEET No.	TOTAL SHEETS
08	SBd	10	4.7/R37.0		

REGISTERED CIVIL ENGINEER DATE

PLANS APPROVAL DATE

REGISTERED PROFESSIONAL ENGINEER No. Exp. CIVIL STATE OF CALIFORNIA

THE STATE OF CALIFORNIA OR ITS OFFICERS OR AGENTS SHALL NOT BE RESPONSIBLE FOR THE ACCURACY OR COMPLETENESS OF SCANNED COPIES OF THIS PLAN SHEET.

PARSONS
2201 DUPONT DRIVE
SUITE 200
IRVINE, CA 92612

SAN BERNARDINO ASSOCIATED GOVERNMENTS
1170 W. 3RD STREET
SAN BERNARDINO, CA 92410

NOTE:

FOR EXISTING PAVEMENT STRUCTURAL SECTIONS, PLEASE SEE THE PRELIMINARY MATERIALS REPORT.
EXISTING PAVEMENT STRUCTURAL SECTIONS WILL NEED TO BE CONFIRMED DURING FINAL DESIGN.

PROPOSED PAVEMENT STRUCTURE SECTIONS

1	0.95′ JPCP 0.25′ HMA-A 0.60′ AS*	TI = 12.0 I-10 INSIDE LANE
1A	R VALUE > 40, USE 0.80′ JPCP 0.50′ AB R VALUE < 40, USE 0.80′ JPCP 1.00′ AB	TI = 9.0 I-10 INSIDE SHOULDER
2	1.20′ JPCP 0.25′ HMA-A 0.70′ AS*	TI = 15.5 TO 16.0 I-10 OUTSIDE LANE
3	1.25′ JPCP 0.25′ HMA-A 0.70′ AS*	TI = 16.5 TO 17.0 I-10 OUTSIDE LANE
3A	1.30′ JPCP 0.25′ HMA-A 0.70′ AS*	TI = 17.5 TO 18.0 I-10 OUTSIDE LANE
4	R VALUE > 40, USE 0.80′ JPCP 0.65′-0.75′ AB** R VALUE < 40, USE 0.80′ JPCP 1.35′-1.45′ AB**	TI = 9.0 I-10 OUTSIDE SHOULDER
5	1.05′ JPCP 0.25′ HMA-A 0.70′ AS*	TI = 14.0 CONNECTOR
6	0.65′ HMA-A 0.85′ AB	TI = 10.0 RAMP (MEDIUM) (20-YR)
7	1.05′ JPCP 0.25′ HMA-A 0.60′ AS*	TI = 14.0 RAMP (HEAVY) (40-YR)
8	0.90′ JPCP 0.25′ HMA-A 0.60′ AS*	TI = 11.0 RAMP (MEDIUM) (40-YR)
9	0.75′ JPCP 0.25′ HMA-A 0.50′ AS*	TI = 9.0 RAMP (LIGHT) (40-YR)
10	0.70′ HMA-A 1.55′ AB	TI = 11.0 ARTERIAL
11	0.55′ HMA-A 0.95′ AB	TI = 8.0 CHP, MVP, Misc PAVEMENT, TEMPORARY PAVEMENT

* AGGREGATE SUBBASE LAYER IS NOT REQUIRED WEST OF RANCHO AVENUE BASED ON PRELIMINARY R VALUE > 40. AGGREGATE SUBBASE LAYER IS RECOMMENDED EAST OF RANCHO AVENUE BASED ON PRELIMINARY R VALUE OF 15. FINAL DETERMINATION TO BE MADE DURING FINAL DESIGN.

** ADJUST DEPTH AS REQUIRED TO MATCH THE TOTAL DEPTH OF THE ADJOINING LANE PAVEMENT STRUCTURAL SECTION.

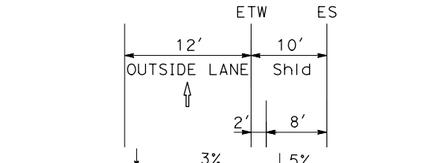

I-10 PAVEMENT DETAIL

ABBREVIATIONS

Aux = AUXILIARY LANE
CHP = CALIFORNIA HIGHWAY PATROL
I/E = INGRESS/EGRESS
Trans = TRANSITION LANE
EXP = EXPRESS LANE

DESIGN DESIGNATION - ROUTE 10

INDIAN HILL BOULEVARD TO I-15

ADT (2025) =	302,000	D =	54%	TI_{40} = 12.0	INSIDE LANE
ADT (2045) =	322,000	T =	11%	TI_{40} = 9.0	INSIDE SHOULDER
DHV =	24,343	V =	70 mph	TI_{40} = 17.5	OUTSIDE LANE
ESAL =	369,217,856			TI_{40} = 9.0	OUTSIDE SHOULDER

DESIGN DESIGNATION - ROUTE 10

I-15 TO I-215

ADT (2025) =	235,000	D =	50%	TI_{40} = 12.0	INSIDE LANE
ADT (2045) =	268,000	T =	7%	TI_{40} = 9.0	INSIDE SHOULDER
DHV =	18,760	V =	70 mph	TI_{40} = 16.0	OUTSIDE LANE
ESAL =	176,867,522			TI_{40} = 9.0	OUTSIDE SHOULDER

DESIGN DESIGNATION - ROUTE 10

I-215 TO SR-210

ADT (2025) =	247,000	D =	52%	TI_{40} = 12.0	INSIDE LANE
ADT (2045) =	283,000	T =	7%	TI_{40} = 9.0	INSIDE SHOULDER
DHV =	19,867	V =	70 mph	TI_{40} = 16.0	OUTSIDE LANE
ESAL =	158,269,807			TI_{40} = 9.0	OUTSIDE SHOULDER

DESIGN DESIGNATION - ROUTE 10

SR-210 TO FORD ST

ADT (2025) =	214,000	D =	51%	TI_{40} = 12.0	INSIDE LANE
ADT (2045) =	254,000	T =	7%	TI_{40} = 9.0	INSIDE SHOULDER
DHV =	17,488	V =	70 mph	TI_{40} = 15.5	OUTSIDE LANE
ESAL =	135,164,020			TI_{40} = 9.0	OUTSIDE SHOULDER

I-10 CORRIDOR PROJECT
ALTERNATIVE 2 - HOV
TYPICAL CROSS SECTIONS

NO SCALE

X-1

REVISED BY | DATE REVISED
CALCULATED-DESIGNED BY | CHECKED BY
CONSULTANT FUNCTIONAL SUPERVISOR
STATE OF CALIFORNIA - DEPARTMENT OF TRANSPORTATION
Caltrans

LAST REVISION 00-00-00 | DATE PLOTTED => 3/2/2016 | TIME PLOTTED => 4:53:27 PM

Dist	COUNTY	ROUTE	POST MILES TOTAL PROJECT	SHEET No.	TOTAL SHEETS
08	SBd	10	4.7/R37.0		

REGISTERED CIVIL ENGINEER DATE

PLANS APPROVAL DATE

REGISTERED PROFESSIONAL ENGINEER No. Exp. CIVIL STATE OF CALIFORNIA

THE STATE OF CALIFORNIA OR ITS OFFICERS OR AGENTS SHALL NOT BE RESPONSIBLE FOR THE ACCURACY OR COMPLETENESS OF SCANNED COPIES OF THIS PLAN SHEET.

PARSONS
2201 DUPONT DRIVE
SUITE 200
IRVINE, CA 92612

SAN BERNARDINO
ASSOCIATED GOVERNMENTS
1170 W. 3RD STREET
SAN BERNARDINO, CA 92410

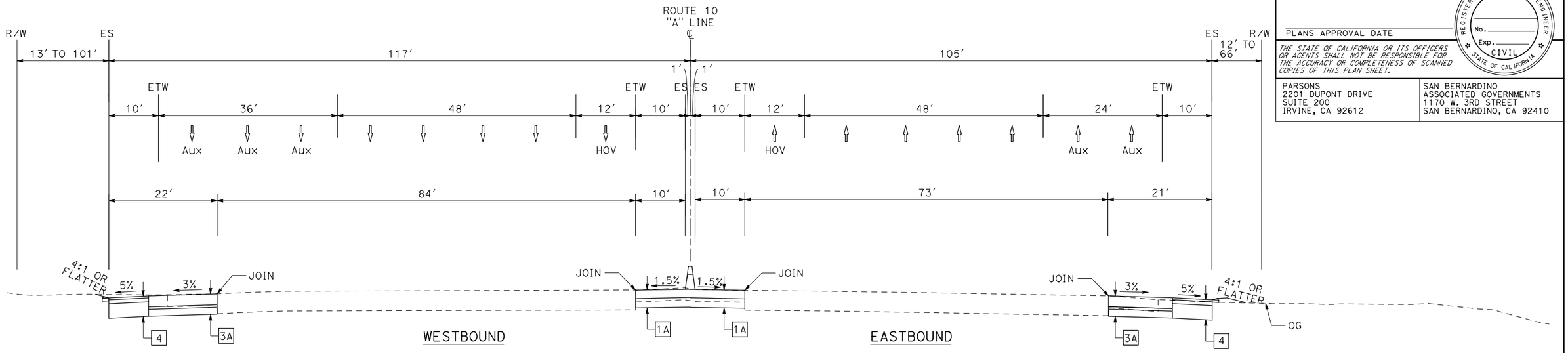

ROUTE 10
MILLIKEN AVENUE TO ROUTE 15

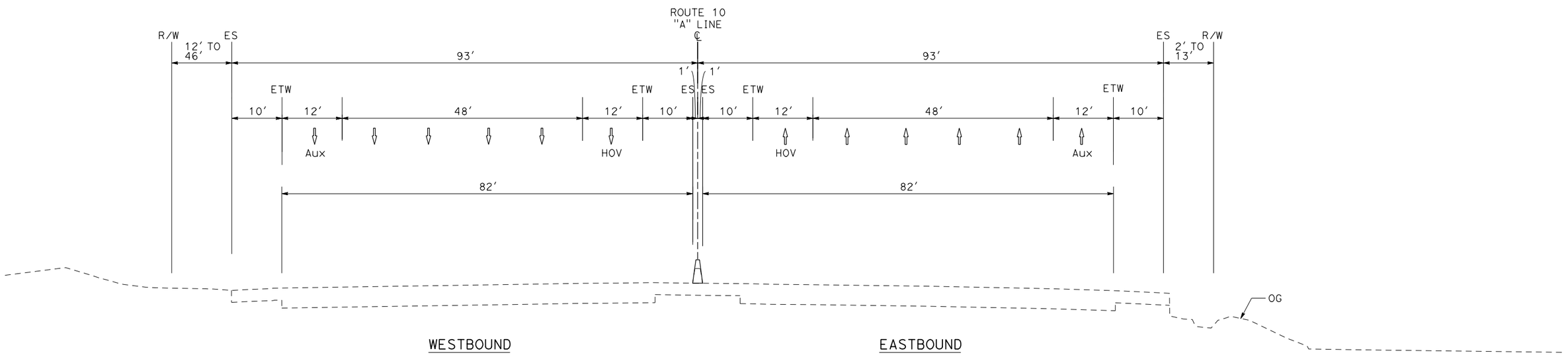

ROUTE 10
HAVEN AVENUE TO MILLIKEN AVENUE
(STRIPING ONLY)

I-10 CORRIDOR PROJECT
ALTERNATIVE 2 - HOV

TYPICAL CROSS SECTIONS

NO SCALE

X-2

REVISED BY | DATE REVISED

CALCULATED-DESIGNED BY | CHECKED BY

CONSULTANT FUNCTIONAL SUPERVISOR

STATE OF CALIFORNIA - DEPARTMENT OF TRANSPORTATION

Caltrans

LAST REVISION 00-00-00 | DATE PLOTTED => 3/2/2016 | TIME PLOTTED => 3:07:04 PM

Dist	COUNTY	ROUTE	POST MILES TOTAL PROJECT	SHEET No.	TOTAL SHEETS
08	SBd	10	4.7/R37.0		

REGISTERED CIVIL ENGINEER DATE

PLANS APPROVAL DATE

REGISTERED PROFESSIONAL ENGINEER No. Exp. CIVIL STATE OF CALIFORNIA

THE STATE OF CALIFORNIA OR ITS OFFICERS OR AGENTS SHALL NOT BE RESPONSIBLE FOR THE ACCURACY OR COMPLETENESS OF SCANNED COPIES OF THIS PLAN SHEET.

PARSONS
2201 DUPONT DRIVE
SUITE 200
IRVINE, CA 92612

SAN BERNARDINO
ASSOCIATED GOVERNMENTS
1170 W. 3RD STREET
SAN BERNARDINO, CA 92410

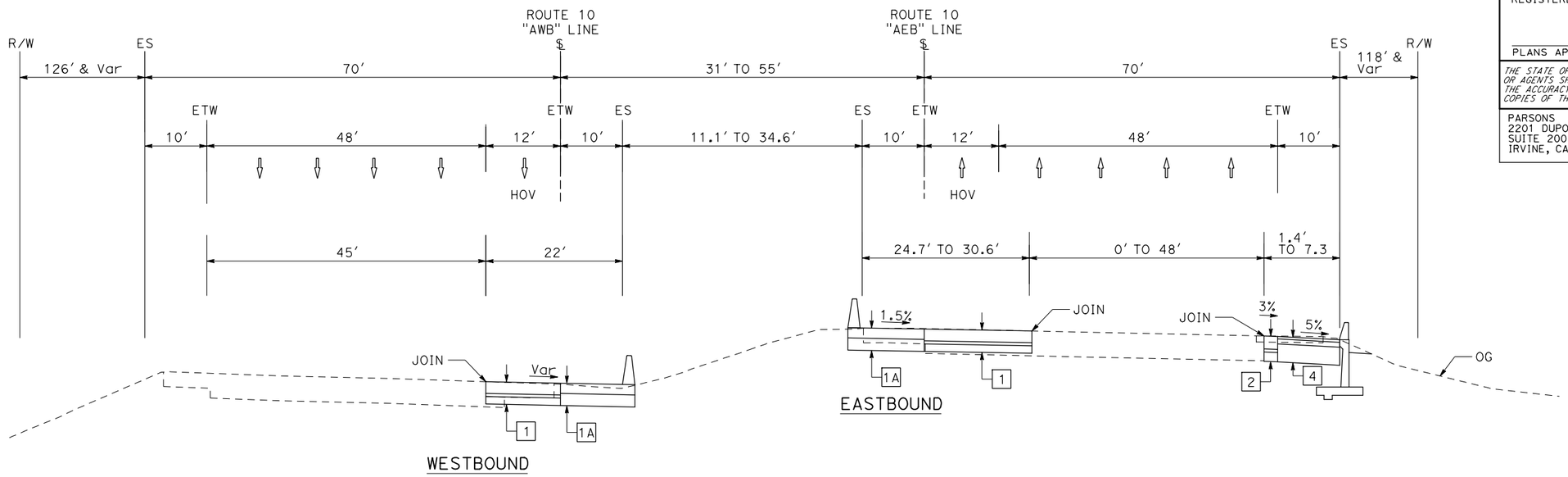

ROUTE 10
ETIWANDA AVENUE TO ETIWANDA - SAN SEVAINE CREEK

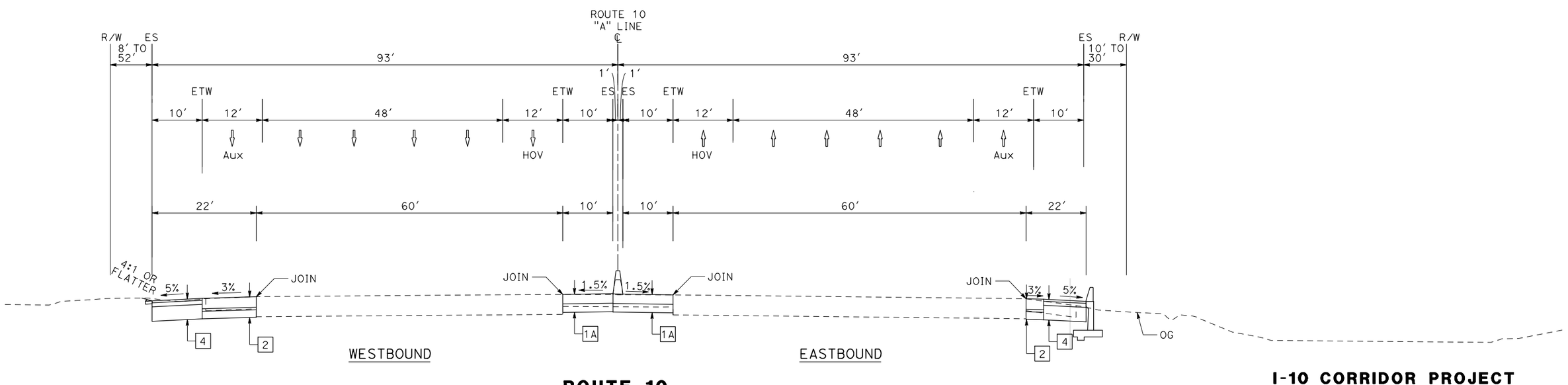

ROUTE 10
ROUTE 15 TO ETIWANDA AVENUE

I-10 CORRIDOR PROJECT
ALTERNATIVE 2 - HOV
TYPICAL CROSS SECTIONS

NO SCALE

X-3

STATE OF CALIFORNIA - DEPARTMENT OF TRANSPORTATION

Caltrans

CONSULTANT FUNCTIONAL SUPERVISOR

CALCULATED-DESIGNED BY

CHECKED BY

REVISED BY

DATE REVISED

LAST REVISION 00-00-00

DATE PLOTTED => 3/2/2016
TIME PLOTTED => 3:07:10 PM

Dist	COUNTY	ROUTE	POST MILES TOTAL PROJECT	SHEET No.	TOTAL SHEETS
08	SBd	10	4.7/R37.0		

REGISTERED CIVIL ENGINEER DATE

PLANS APPROVAL DATE

REGISTERED PROFESSIONAL ENGINEER No. Exp. CIVIL STATE OF CALIFORNIA

THE STATE OF CALIFORNIA OR ITS OFFICERS OR AGENTS SHALL NOT BE RESPONSIBLE FOR THE ACCURACY OR COMPLETENESS OF SCANNED COPIES OF THIS PLAN SHEET.

PARSONS
2201 DUPONT DRIVE
SUITE 200
IRVINE, CA 92612

SAN BERNARDINO
ASSOCIATED GOVERNMENTS
1170 W. 3RD STREET
SAN BERNARDINO, CA 92410

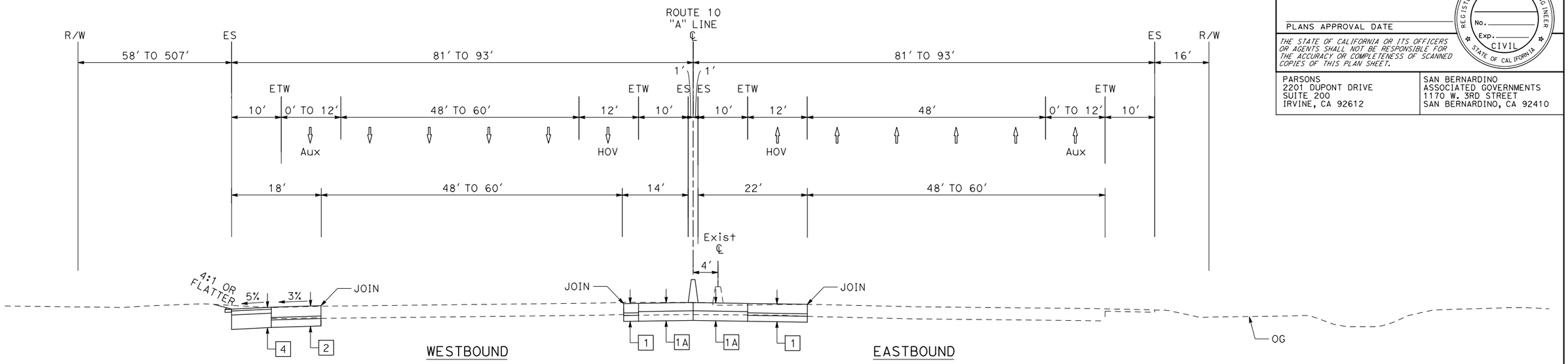

ROUTE 10
CHERRY AVENUE TO CITRUS AVENUE

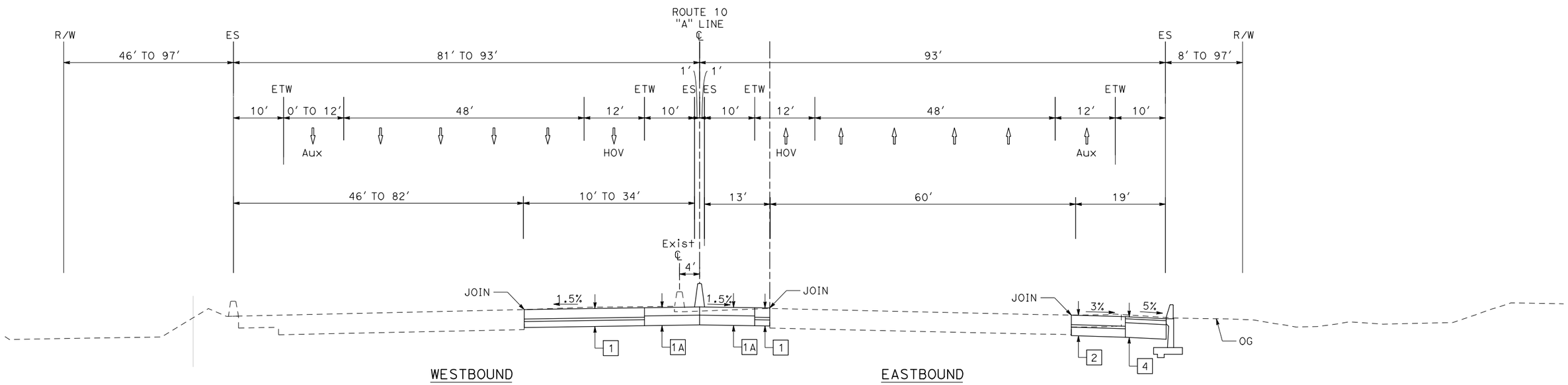

ROUTE 10
ETIWANDA - SAN SEVAINE CREEK TO CHERRY AVENUE

I-10 CORRIDOR PROJECT
ALTERNATIVE 2 - HOV
TYPICAL CROSS SECTIONS

NO SCALE

X-4

REVISED BY | DATE REVISED

CALCULATED-DESIGNED BY | CHECKED BY

CONSULTANT FUNCTIONAL SUPERVISOR

STATE OF CALIFORNIA - DEPARTMENT OF TRANSPORTATION

Caltrans

LAST REVISION 00-00-00 | DATE PLOTTED => 3/2/2016 TIME PLOTTED => 3:07:18 PM

Dist	COUNTY	ROUTE	POST MILES TOTAL PROJECT	SHEET No.	TOTAL SHEETS
08	SBd	10	4.7/R37.0		

REGISTERED CIVIL ENGINEER DATE

PLANS APPROVAL DATE

REGISTERED PROFESSIONAL ENGINEER No. Exp. CIVIL STATE OF CALIFORNIA

THE STATE OF CALIFORNIA OR ITS OFFICERS OR AGENTS SHALL NOT BE RESPONSIBLE FOR THE ACCURACY OR COMPLETENESS OF SCANNED COPIES OF THIS PLAN SHEET.

PARSONS
2201 DUPONT DRIVE
SUITE 200
IRVINE, CA 92612

SAN BERNARDINO
ASSOCIATED GOVERNMENTS
1170 W. 3RD STREET
SAN BERNARDINO, CA 92410

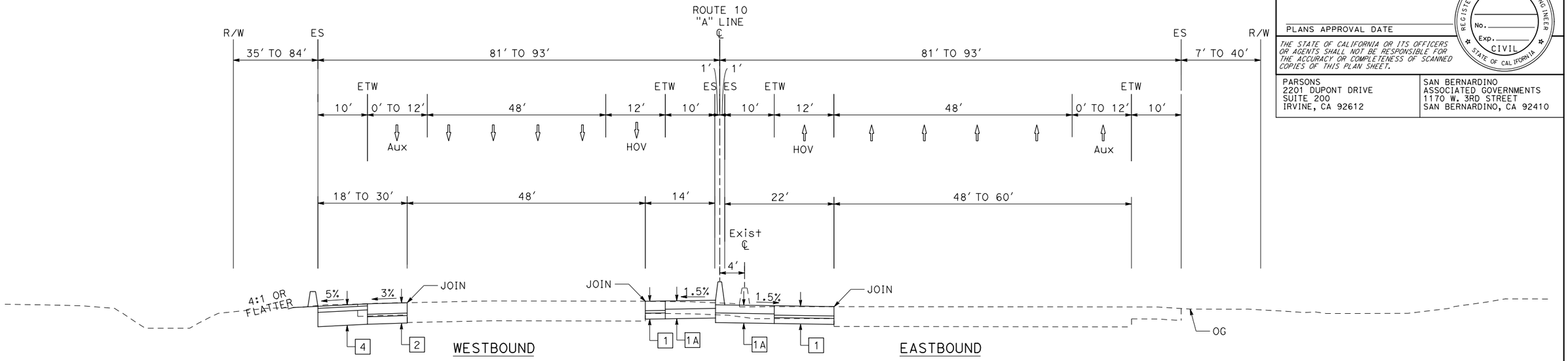

ROUTE 10
SIERRA AVENUE TO CEDAR AVENUE

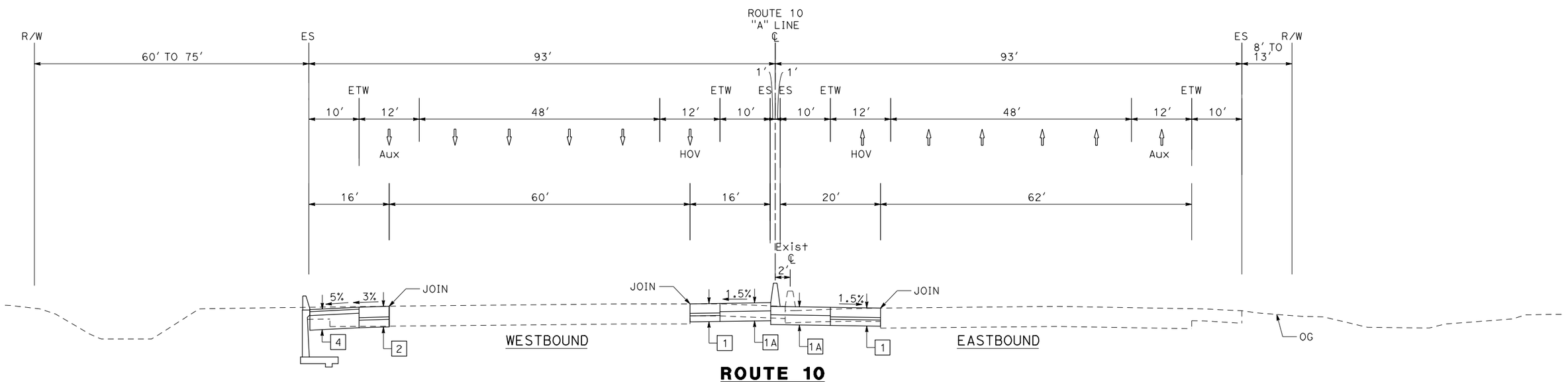

ROUTE 10
CITRUS AVENUE TO SIERRA AVENUE

I-10 CORRIDOR PROJECT
ALTERNATIVE 2 - HOV

TYPICAL CROSS SECTIONS

NO SCALE

X-5

REVISED BY | DATE REVISED

CALCULATED-DESIGNED BY | CHECKED BY

CONSULTANT FUNCTIONAL SUPERVISOR

STATE OF CALIFORNIA - DEPARTMENT OF TRANSPORTATION

Caltrans

LAST REVISION 00-00-00 | DATE PLOTTED => 3/2/2016 TIME PLOTTED => 3:07:24 PM

Dist	COUNTY	ROUTE	POST MILES TOTAL PROJECT	SHEET No.	TOTAL SHEETS
08	SBd	10	4.7/R37.0		

REGISTERED CIVIL ENGINEER DATE

PLANS APPROVAL DATE

REGISTERED PROFESSIONAL ENGINEER No. Exp. CIVIL STATE OF CALIFORNIA

THE STATE OF CALIFORNIA OR ITS OFFICERS OR AGENTS SHALL NOT BE RESPONSIBLE FOR THE ACCURACY OR COMPLETENESS OF SCANNED COPIES OF THIS PLAN SHEET.

PARSONS
2201 DUPONT DRIVE
SUITE 200
IRVINE, CA 92612

SAN BERNARDINO
ASSOCIATED GOVERNMENTS
1170 W. 3RD STREET
SAN BERNARDINO, CA 92410

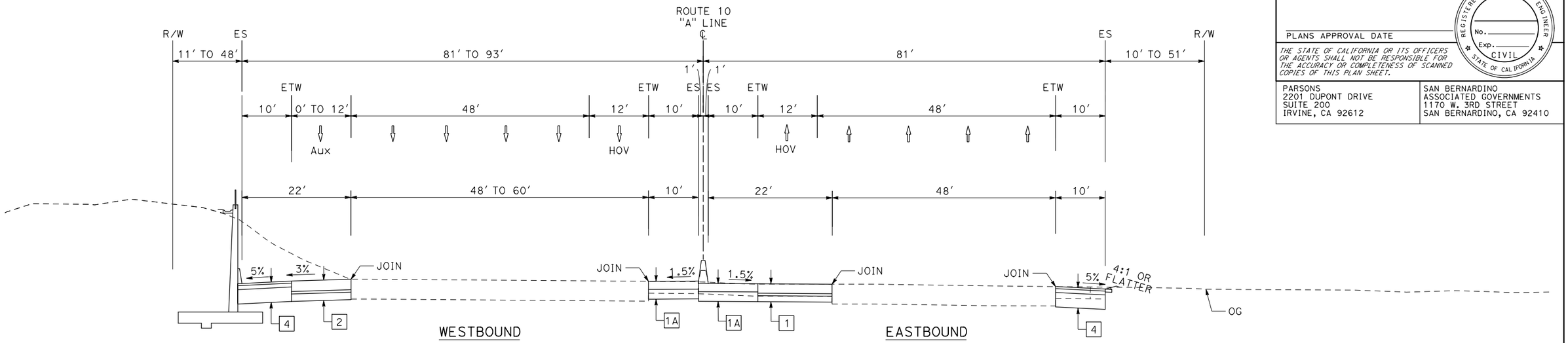

ROUTE 10
RIVERSIDE AVENUE TO PEPPER AVENUE

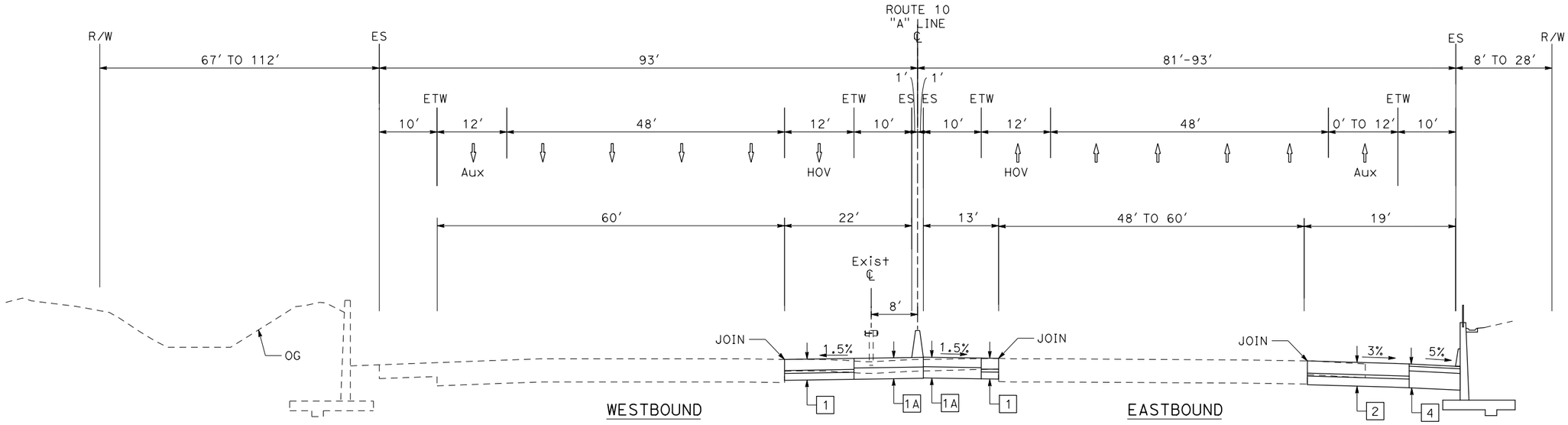

ROUTE 10
CEDAR AVENUE TO RIVERSIDE AVENUE

I-10 CORRIDOR PROJECT
ALTERNATIVE 2 - HOV

TYPICAL CROSS SECTIONS

NO SCALE

X-6

STATE OF CALIFORNIA - DEPARTMENT OF TRANSPORTATION

Caltrans

CONSULTANT FUNCTIONAL SUPERVISOR

CALCULATED-DESIGNED BY

CHECKED BY

REVISED BY

DATE REVISED

LAST REVISION 00-00-00

DATE PLOTTED => 3/2/2016
TIME PLOTTED => 3:07:29 PM

Dist	COUNTY	ROUTE	POST MILES TOTAL PROJECT	SHEET No.	TOTAL SHEETS
08	SBd	10	4.7/R37.0		

REGISTERED CIVIL ENGINEER DATE

PLANS APPROVAL DATE

REGISTERED PROFESSIONAL ENGINEER No. Exp. CIVIL STATE OF CALIFORNIA

THE STATE OF CALIFORNIA OR ITS OFFICERS OR AGENTS SHALL NOT BE RESPONSIBLE FOR THE ACCURACY OR COMPLETENESS OF SCANNED COPIES OF THIS PLAN SHEET.

PARSONS
2201 DUPONT DRIVE
SUITE 200
IRVINE, CA 92612

SAN BERNARDINO
ASSOCIATED GOVERNMENTS
1170 W. 3RD STREET
SAN BERNARDINO, CA 92410

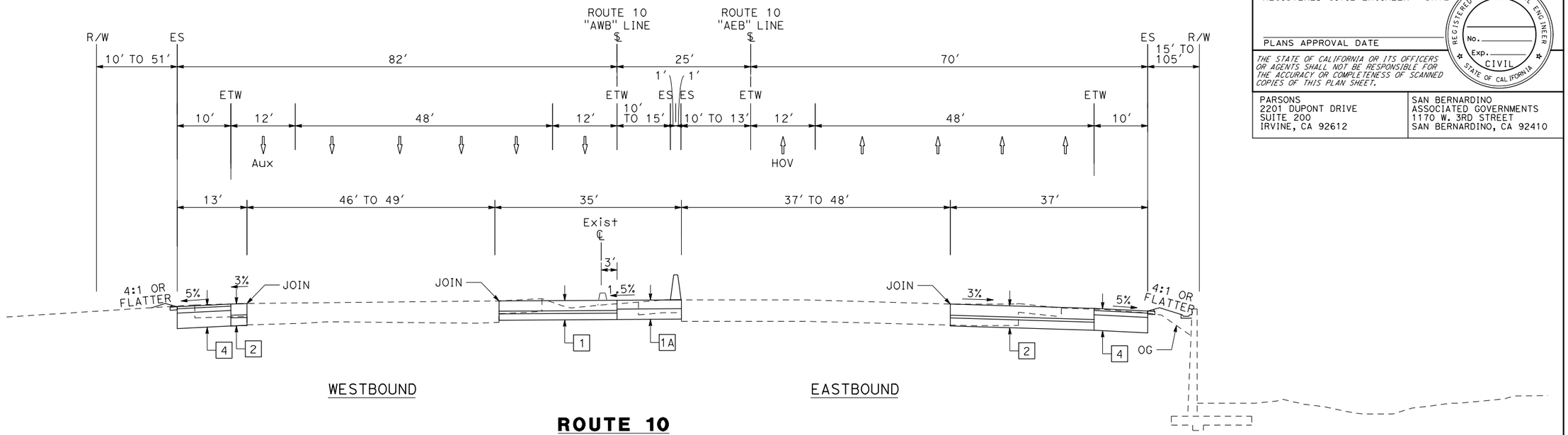

ROUTE 10
RANCHO AVENUE TO 9TH STREET

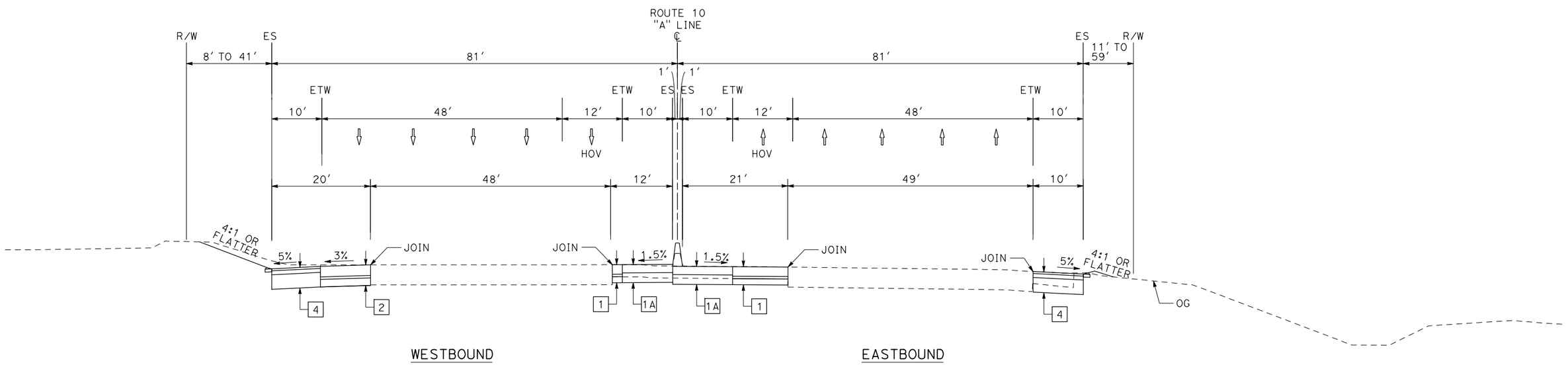

ROUTE 10
PEPPER AVENUE TO RANCHO AVENUE

I-10 CORRIDOR PROJECT
ALTERNATIVE 2 - HOV
TYPICAL CROSS SECTIONS

NO SCALE

X-7

STATE OF CALIFORNIA - DEPARTMENT OF TRANSPORTATION

Caltrans

CONSULTANT FUNCTIONAL SUPERVISOR

CALCULATED-DESIGNED BY

CHECKED BY

REVISED BY

DATE REVISED

LAST REVISION 00-00-00

DATE PLOTTED => 3/2/2016
TIME PLOTTED => 3:07:33 PM

Dist	COUNTY	ROUTE	POST MILES TOTAL PROJECT	SHEET No.	TOTAL SHEETS
08	SBd	10	4.7/R37.0		

REGISTERED CIVIL ENGINEER DATE

PLANS APPROVAL DATE

REGISTERED PROFESSIONAL ENGINEER No. Exp. CIVIL STATE OF CALIFORNIA

THE STATE OF CALIFORNIA OR ITS OFFICERS OR AGENTS SHALL NOT BE RESPONSIBLE FOR THE ACCURACY OR COMPLETENESS OF SCANNED COPIES OF THIS PLAN SHEET.

PARSONS
2201 DUPONT DRIVE
SUITE 200
IRVINE, CA 92612

SAN BERNARDINO
ASSOCIATED GOVERNMENTS
1170 W. 3RD STREET
SAN BERNARDINO, CA 92410

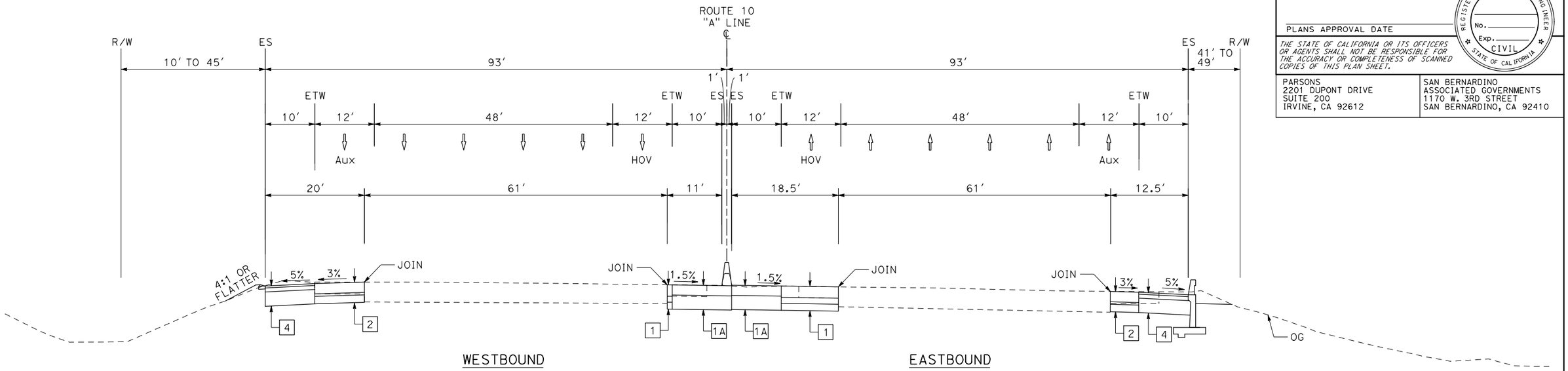

ROUTE 10
MOUNT VERNON AVENUE TO ROUTE 215

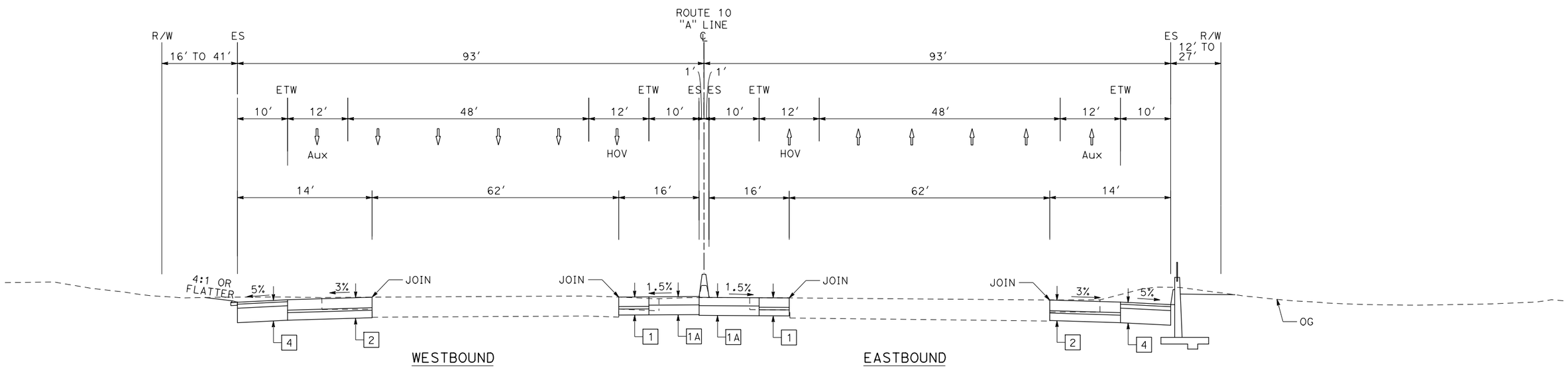

ROUTE 10
9TH STREET TO MOUNT VERNON AVENUE

I-10 CORRIDOR PROJECT
ALTERNATIVE 2 - HOV

TYPICAL CROSS SECTIONS

NO SCALE

X-8

REVISED BY | DATE REVISED
CALCULATED-DESIGNED BY | CHECKED BY
CONSULTANT FUNCTIONAL SUPERVISOR
STATE OF CALIFORNIA - DEPARTMENT OF TRANSPORTATION
Caltrans

LAST REVISION 00-00-00 | DATE PLOTTED => 3/2/2016 | TIME PLOTTED => 3:07:38 PM

Dist	COUNTY	ROUTE	POST MILES TOTAL PROJECT	SHEET No.	TOTAL SHEETS
08	SBd	10	4.7/R37.0		

REGISTERED CIVIL ENGINEER DATE

PLANS APPROVAL DATE

REGISTERED PROFESSIONAL ENGINEER No. Exp. CIVIL STATE OF CALIFORNIA

THE STATE OF CALIFORNIA OR ITS OFFICERS OR AGENTS SHALL NOT BE RESPONSIBLE FOR THE ACCURACY OR COMPLETENESS OF SCANNED COPIES OF THIS PLAN SHEET.

PARSONS
2201 DUPONT DRIVE
SUITE 200
IRVINE, CA 92612

SAN BERNARDINO
ASSOCIATED GOVERNMENTS
1170 W. 3RD STREET
SAN BERNARDINO, CA 92410

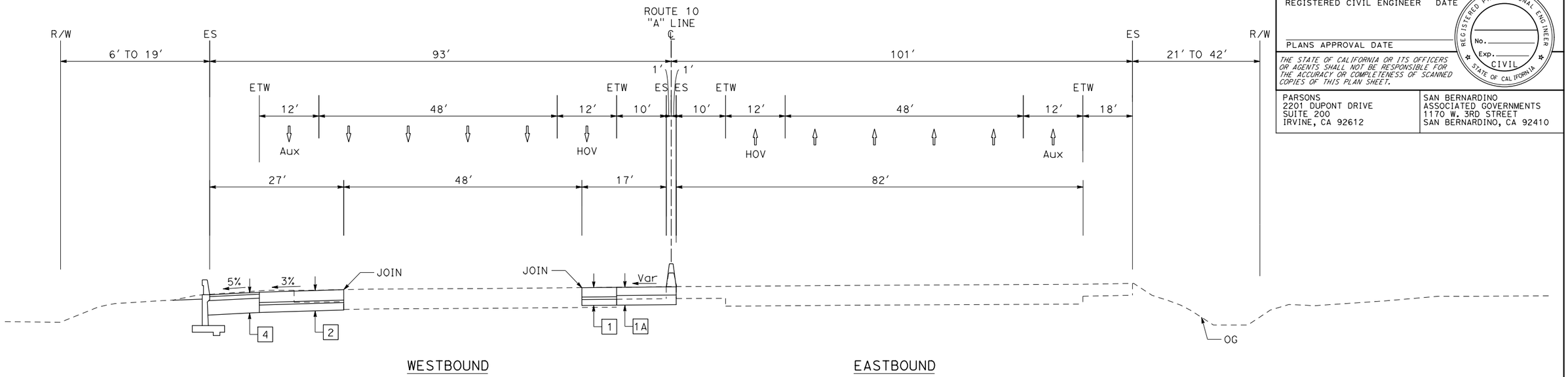

WESTBOUND EASTBOUND

ROUTE 10
WATERMAN AVENUE TO TIPPACANOE AVENUE

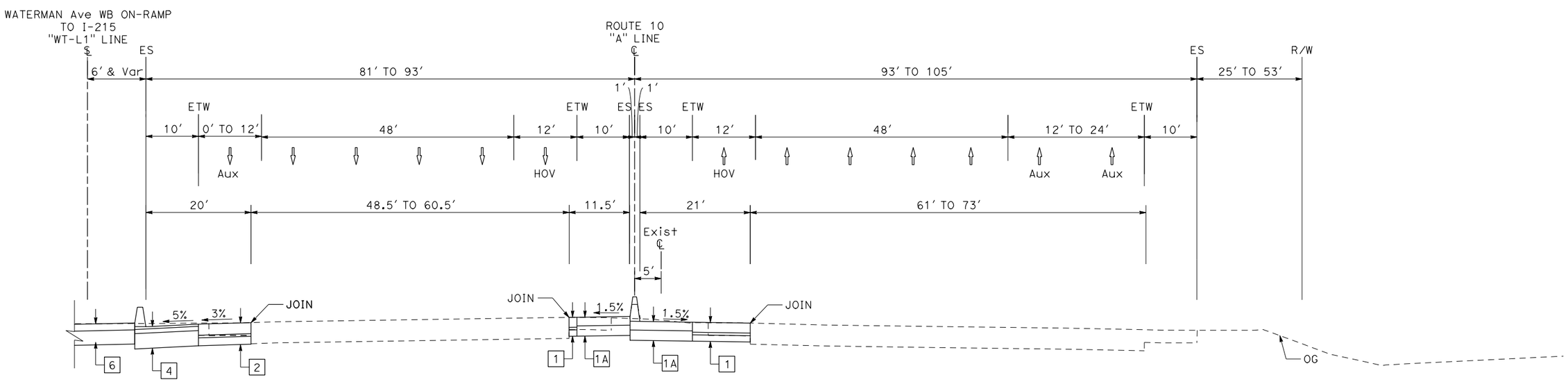

WESTBOUND EASTBOUND

ROUTE 10
ROUTE 215 TO WATERMAN AVENUE

I-10 CORRIDOR PROJECT
ALTERNATIVE 2 - HOV
TYPICAL CROSS SECTIONS

NO SCALE

X-9

STATE OF CALIFORNIA - DEPARTMENT OF TRANSPORTATION

Caltrans

CONSULTANT FUNCTIONAL SUPERVISOR

CALCULATED-DESIGNED BY

CHECKED BY

REVISED BY

DATE REVISED

LAST REVISION 00-00-00

DATE PLOTTED => 3/2/2016
TIME PLOTTED => 3:07:43 PM

Dist	COUNTY	ROUTE	POST MILES TOTAL PROJECT	SHEET No.	TOTAL SHEETS
08	SBd	10	4.7/R37.0		

REGISTERED CIVIL ENGINEER DATE

PLANS APPROVAL DATE

REGISTERED PROFESSIONAL ENGINEER No. Exp. CIVIL STATE OF CALIFORNIA

THE STATE OF CALIFORNIA OR ITS OFFICERS OR AGENTS SHALL NOT BE RESPONSIBLE FOR THE ACCURACY OR COMPLETENESS OF SCANNED COPIES OF THIS PLAN SHEET.

PARSONS
2201 DUPONT DRIVE
SUITE 200
IRVINE, CA 92612

SAN BERNARDINO
ASSOCIATED GOVERNMENTS
1170 W. 3RD STREET
SAN BERNARDINO, CA 92410

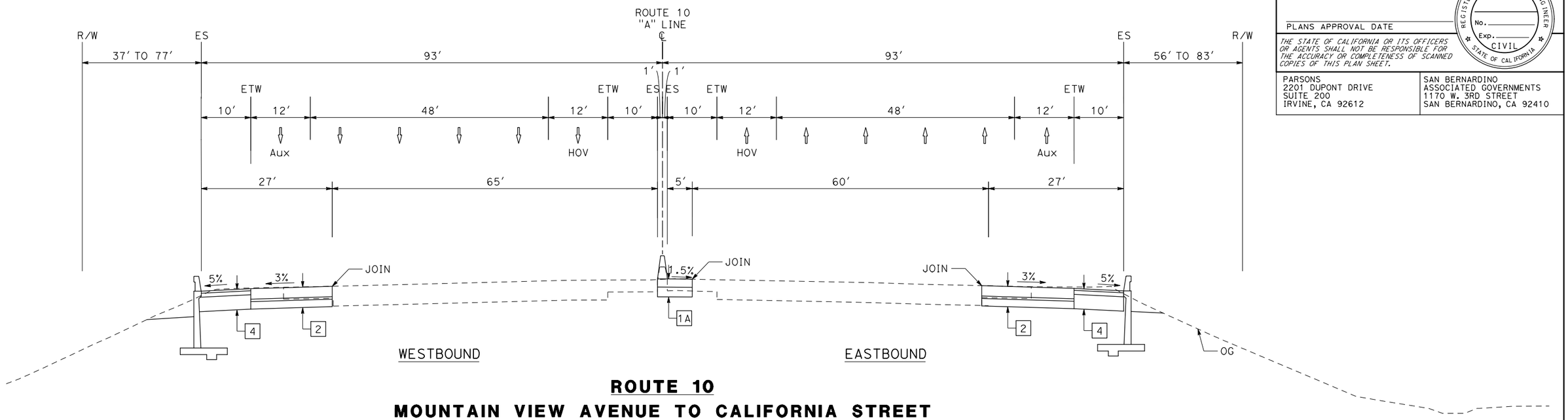

ROUTE 10
MOUNTAIN VIEW AVENUE TO CALIFORNIA STREET

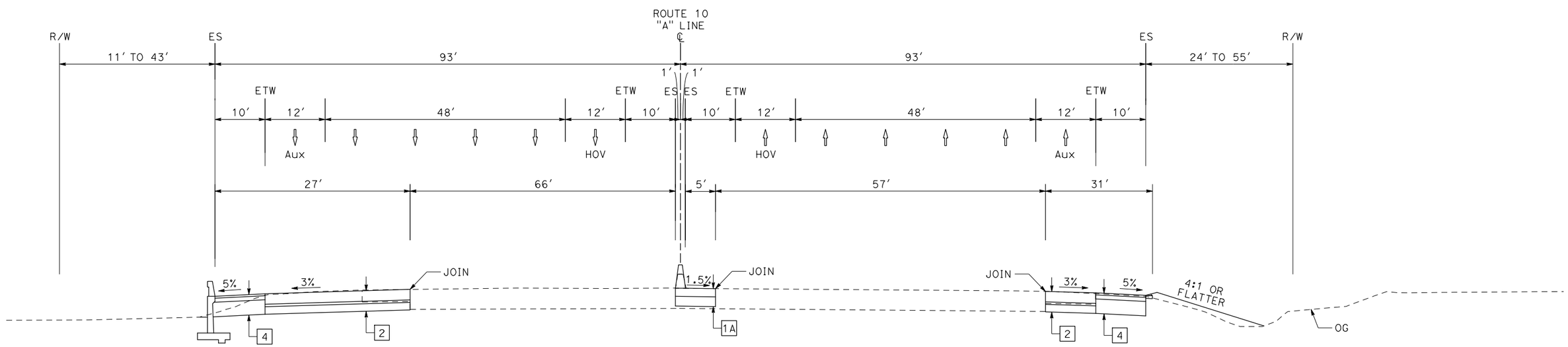

ROUTE 10
TIPPECANOE AVENUE TO MOUNTAIN VIEW AVENUE

I-10 CORRIDOR PROJECT
ALTERNATIVE 2 - HOV

TYPICAL CROSS SECTIONS

NO SCALE

X-10

REVISED BY | DATE REVISED
CALCULATED-DESIGNED BY | CHECKED BY
CONSULTANT FUNCTIONAL SUPERVISOR
STATE OF CALIFORNIA - DEPARTMENT OF TRANSPORTATION
Caltrans

LAST REVISION 00-00-00 | DATE PLOTTED => 3/2/2016 TIME PLOTTED => 3:07:48 PM

Dist	COUNTY	ROUTE	POST MILES TOTAL PROJECT	SHEET No.	TOTAL SHEETS
08	SBd	10	4.7/R37.0		

REGISTERED CIVIL ENGINEER DATE

PLANS APPROVAL DATE

REGISTERED PROFESSIONAL ENGINEER No. Exp. CIVIL STATE OF CALIFORNIA

THE STATE OF CALIFORNIA OR ITS OFFICERS OR AGENTS SHALL NOT BE RESPONSIBLE FOR THE ACCURACY OR COMPLETENESS OF SCANNED COPIES OF THIS PLAN SHEET.

PARSONS
2201 DUPONT DRIVE
SUITE 200
IRVINE, CA 92612

SAN BERNARDINO
ASSOCIATED GOVERNMENTS
1170 W. 3RD STREET
SAN BERNARDINO, CA 92410

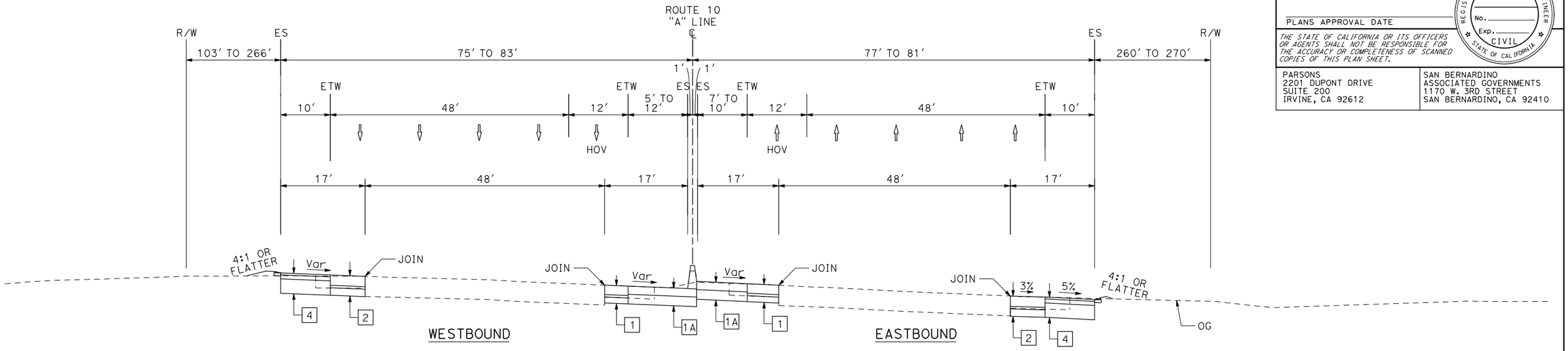

ROUTE 10
ALABAMA STREET TO TENNESSEE STREET

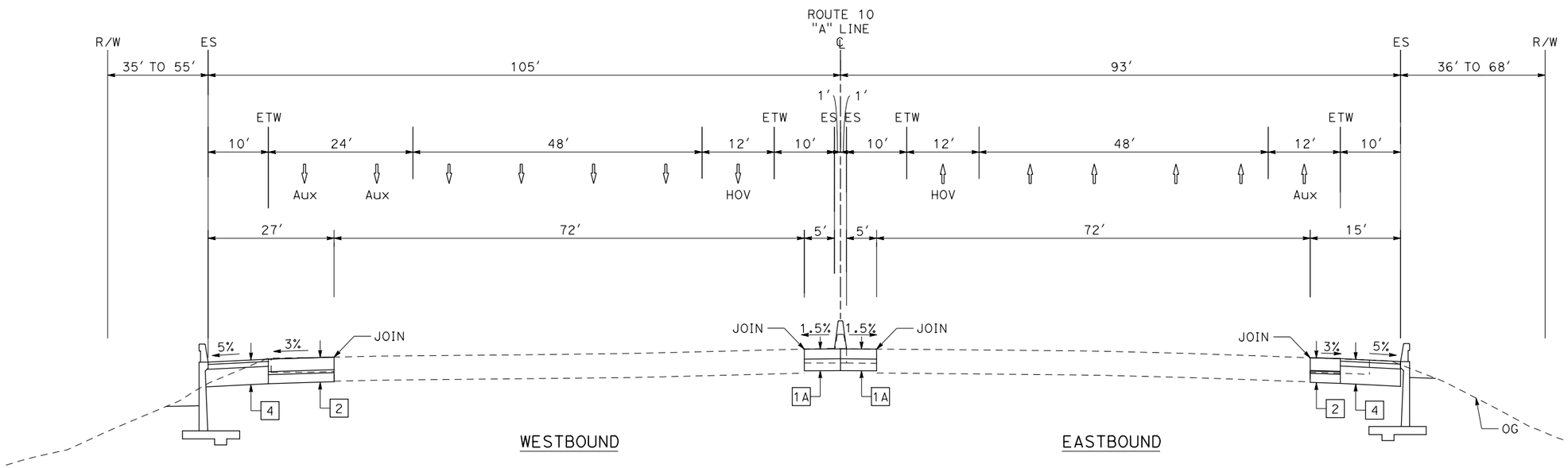

ROUTE 10
CALIFORNIA STREET TO ALABAMA STREET

I-10 CORRIDOR PROJECT
ALTERNATIVE 2 - HOV
TYPICAL CROSS SECTIONS

NO SCALE

X-11

STATE OF CALIFORNIA - DEPARTMENT OF TRANSPORTATION

Caltrans

CONSULTANT FUNCTIONAL SUPERVISOR

CALCULATED-DESIGNED BY

CHECKED BY

REVISED BY

DATE REVISED

LAST REVISION 00-00-00

DATE PLOTTED => 3/2/2016
TIME PLOTTED => 3:07:54 PM

Dist	COUNTY	ROUTE	POST MILES TOTAL PROJECT	SHEET No.	TOTAL SHEETS
08	SBd	10	4.7/R37.0		

REGISTERED CIVIL ENGINEER DATE

PLANS APPROVAL DATE

REGISTERED PROFESSIONAL ENGINEER No. Exp. CIVIL STATE OF CALIFORNIA

THE STATE OF CALIFORNIA OR ITS OFFICERS OR AGENTS SHALL NOT BE RESPONSIBLE FOR THE ACCURACY OR COMPLETENESS OF SCANNED COPIES OF THIS PLAN SHEET.

PARSONS
2201 DUPONT DRIVE
SUITE 200
IRVINE, CA 92612

SAN BERNARDINO
ASSOCIATED GOVERNMENTS
1170 W. 3RD STREET
SAN BERNARDINO, CA 92410

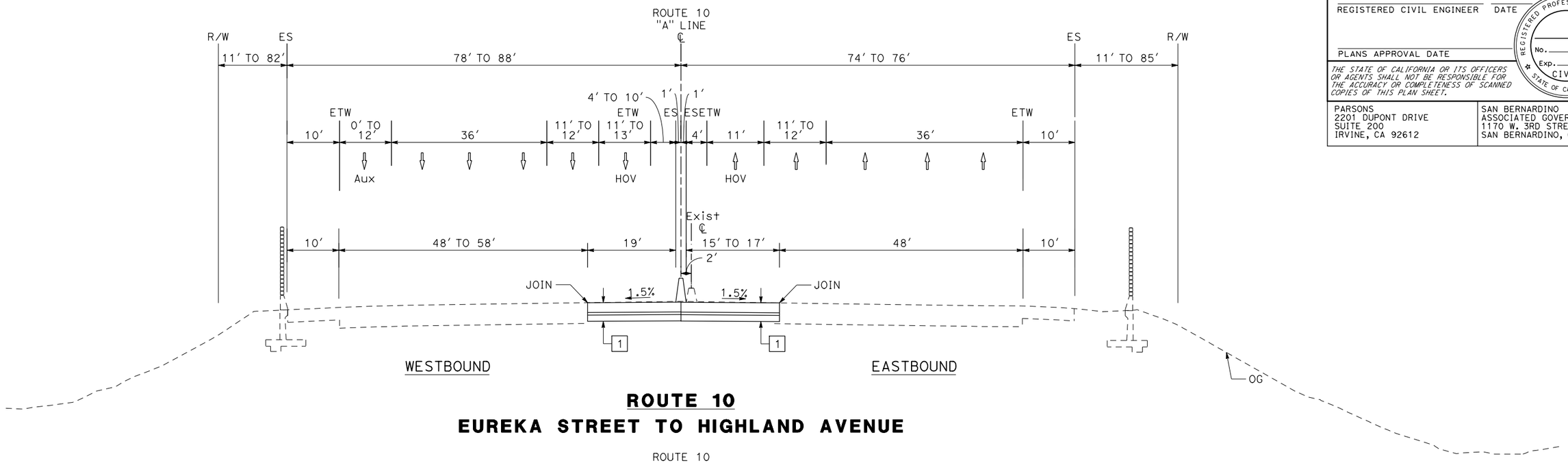

ROUTE 10
EUREKA STREET TO HIGHLAND AVENUE

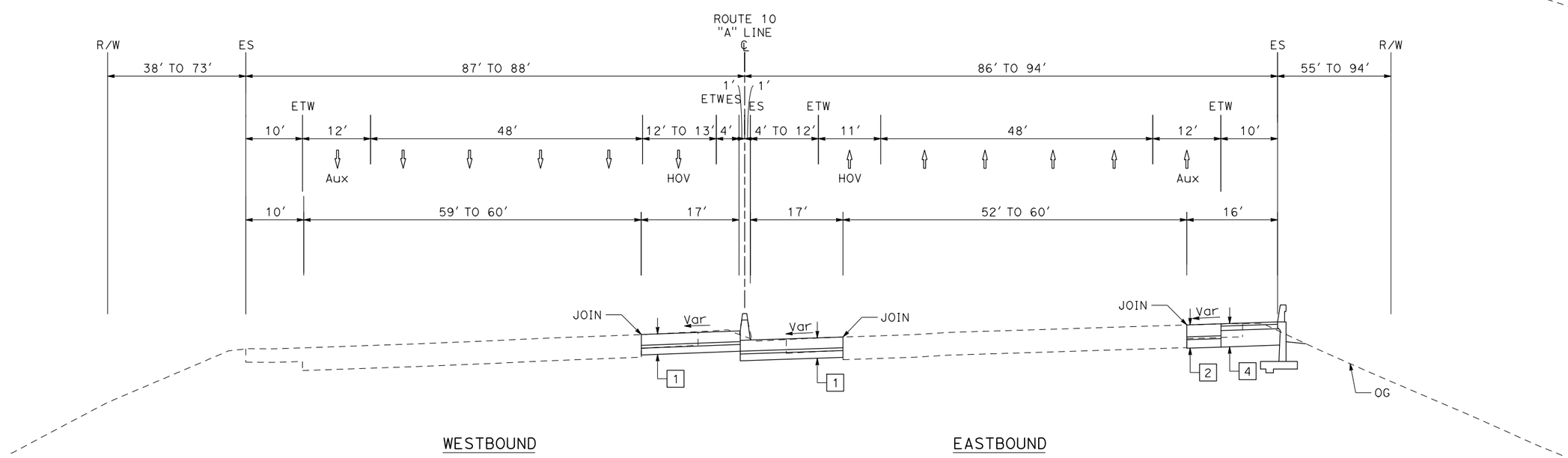

ROUTE 10
TENNESSEE STREET TO EUREKA STREET

I-10 CORRIDOR PROJECT
ALTERNATIVE 2 - HOV

TYPICAL CROSS SECTIONS

NO SCALE

X-12

REVISED BY | DATE REVISED

CALCULATED-DESIGNED BY | CHECKED BY

CONSULTANT FUNCTIONAL SUPERVISOR

STATE OF CALIFORNIA - DEPARTMENT OF TRANSPORTATION

Caltrans

LAST REVISION 00-00-00 | DATE PLOTTED => 3/2/2016 | TIME PLOTTED => 3:08:01 PM

Dist	COUNTY	ROUTE	POST MILES TOTAL PROJECT	SHEET No.	TOTAL SHEETS
08	SBd	10	4.7/R37.0		

REGISTERED CIVIL ENGINEER DATE

PLANS APPROVAL DATE

REGISTERED PROFESSIONAL ENGINEER No. Exp. CIVIL STATE OF CALIFORNIA

THE STATE OF CALIFORNIA OR ITS OFFICERS OR AGENTS SHALL NOT BE RESPONSIBLE FOR THE ACCURACY OR COMPLETENESS OF SCANNED COPIES OF THIS PLAN SHEET.

PARSONS
2201 DUPONT DRIVE
SUITE 200
IRVINE, CA 92612

SAN BERNARDINO
ASSOCIATED GOVERNMENTS
1170 W. 3RD STREET
SAN BERNARDINO, CA 92410

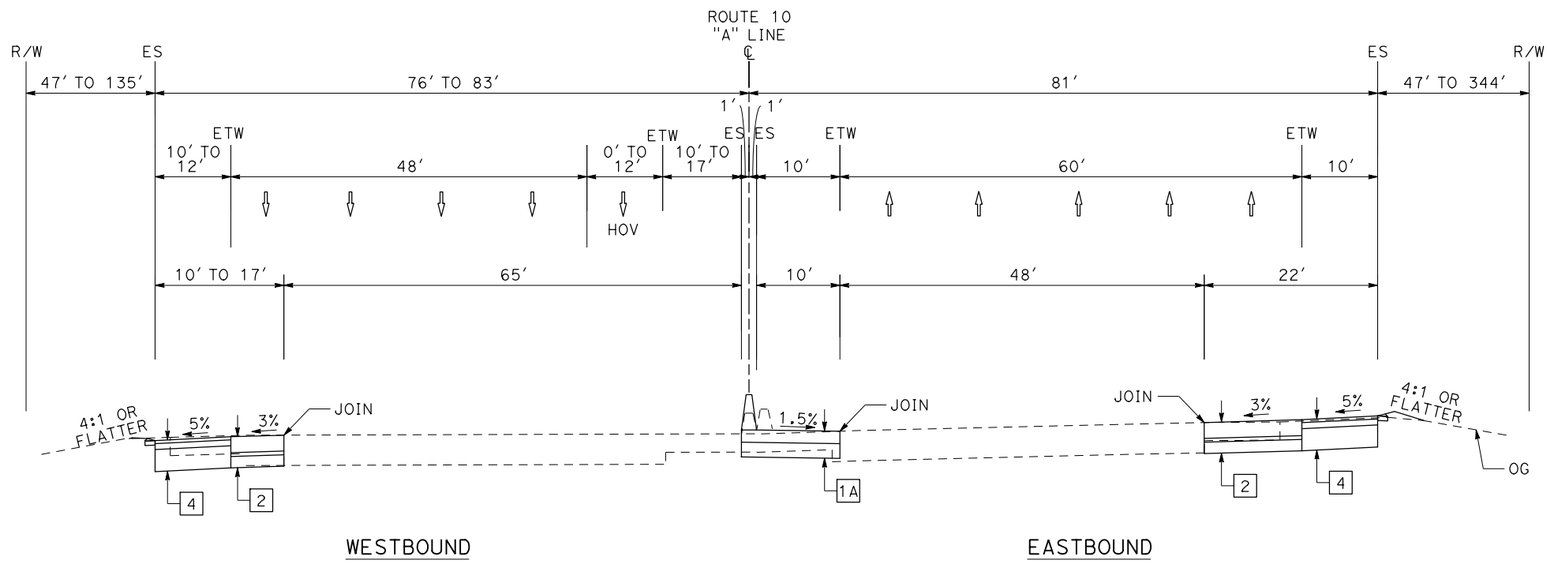

ROUTE 10
FORD STREET TO WABASH AVENUE

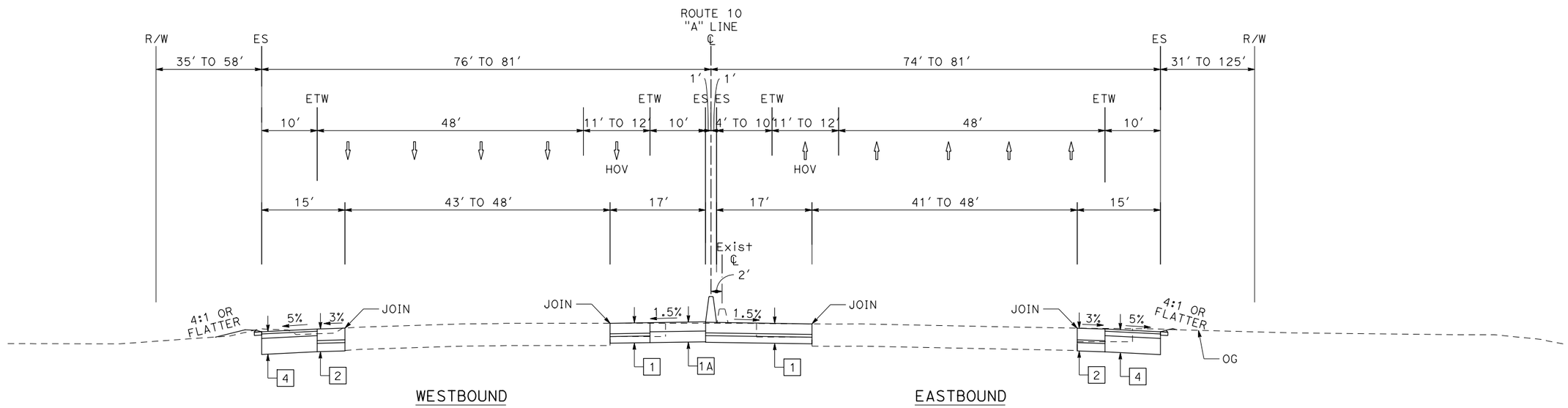

ROUTE 10
HIGHLAND AVENUE TO FORD STREET

I-10 CORRIDOR PROJECT
ALTERNATIVE 2 - HOV
TYPICAL CROSS SECTIONS

NO SCALE

X-13

STATE OF CALIFORNIA - DEPARTMENT OF TRANSPORTATION

Caltrans

CONSULTANT FUNCTIONAL SUPERVISOR

CALCULATED-DESIGNED BY

CHECKED BY

REVISED BY

DATE REVISED

LAST REVISION 00-00-00

DATE PLOTTED => 3/2/2016
TIME PLOTTED => 3:08:08 PM

Dist	COUNTY	ROUTE	POST MILES TOTAL PROJECT	SHEET No.	TOTAL SHEETS
08	SBd	10	4.7/R37.0		

REGISTERED CIVIL ENGINEER DATE

PLANS APPROVAL DATE

REGISTERED PROFESSIONAL ENGINEER
No.
Exp.
CIVIL
STATE OF CALIFORNIA

THE STATE OF CALIFORNIA OR ITS OFFICERS OR AGENTS SHALL NOT BE RESPONSIBLE FOR THE ACCURACY OR COMPLETENESS OF SCANNED COPIES OF THIS PLAN SHEET.

PARSONS
2201 DUPONT DRIVE
SUITE 200
IRVINE, CA 92612

SAN BERNARDINO
ASSOCIATED GOVERNMENTS
1170 W. 3RD STREET
SAN BERNARDINO, CA 92410

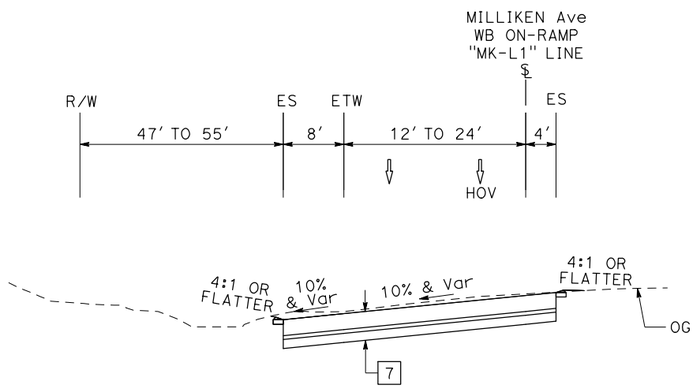

MILLIKEN Ave WB ON-RAMP

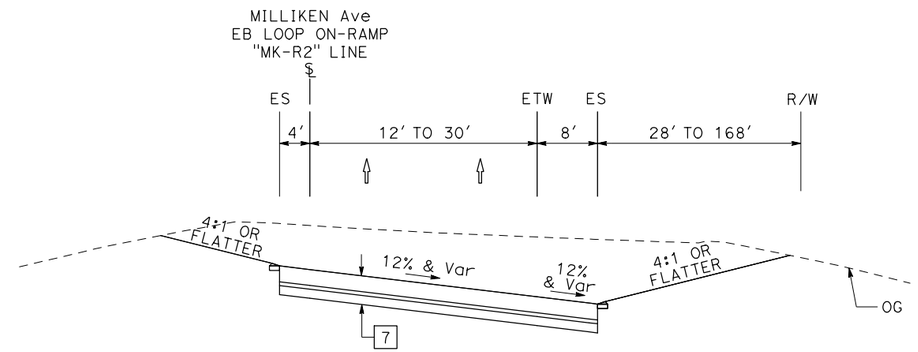

MILLIKEN Ave EB LOOP ON-RAMP

I-10 CORRIDOR PROJECT
ALTERNATIVE 2 - HOV

TYPICAL CROSS SECTIONS

NO SCALE

X-14

STATE OF CALIFORNIA - DEPARTMENT OF TRANSPORTATION
Caltrans

CONSULTANT FUNCTIONAL SUPERVISOR | CALCULATED-DESIGNED BY | CHECKED BY | REVISED BY | DATE REVISED

LAST REVISION 00-00-00 | DATE PLOTTED => 10/8/2015 | TIME PLOTTED => 2:35:05 PM

Dist	COUNTY	ROUTE	POST MILES TOTAL PROJECT	SHEET No.	TOTAL SHEETS
08	SBd	10	4.7/R37.0		

REGISTERED CIVIL ENGINEER DATE

PLANS APPROVAL DATE

REGISTERED PROFESSIONAL ENGINEER No. Exp. CIVIL STATE OF CALIFORNIA

THE STATE OF CALIFORNIA OR ITS OFFICERS OR AGENTS SHALL NOT BE RESPONSIBLE FOR THE ACCURACY OR COMPLETENESS OF SCANNED COPIES OF THIS PLAN SHEET.

PARSONS
2201 DUPONT DRIVE
SUITE 200
IRVINE, CA 92612

SAN BERNARDINO
ASSOCIATED GOVERNMENTS
1170 W. 3RD STREET
SAN BERNARDINO, CA 92410

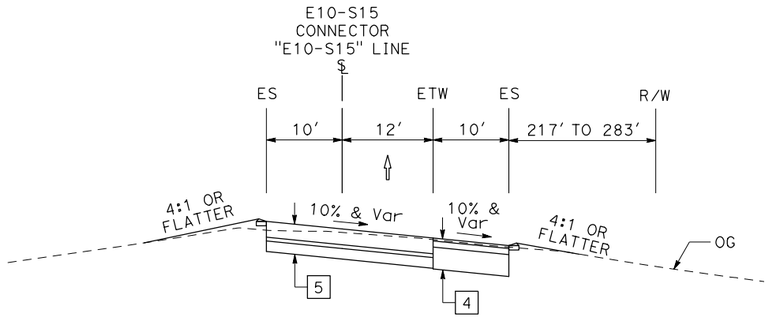

E10-S15 CONNECTOR

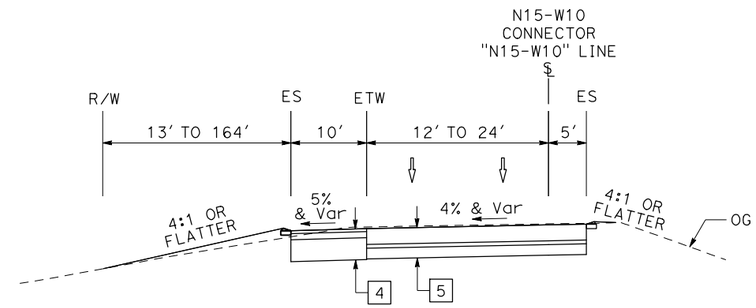

N15-W10 CONNECTOR

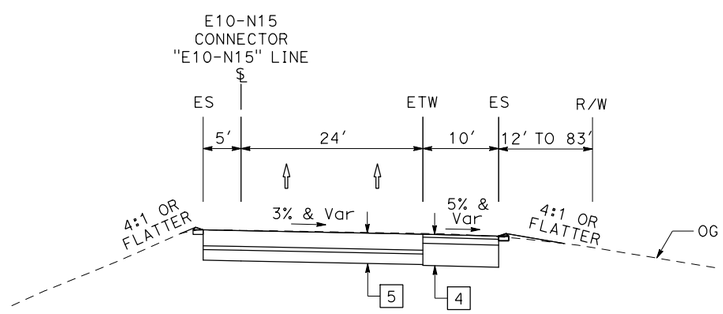

E10-N15 CONNECTOR

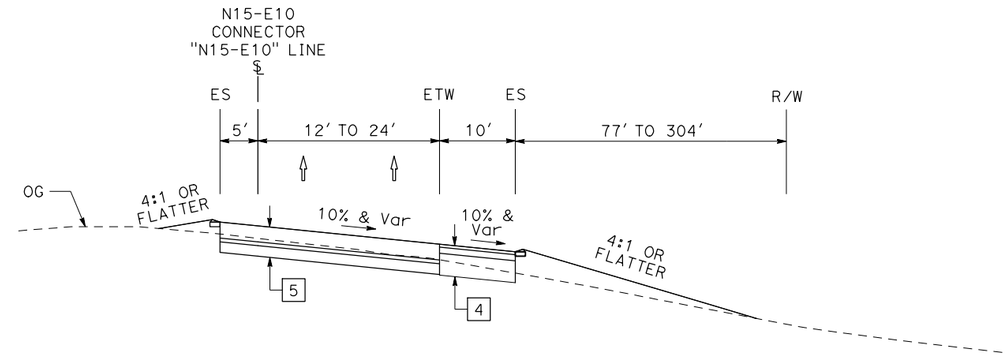

N15-E10 CONNECTOR

I-10 CORRIDOR PROJECT
ALTERNATIVE 2 - HOV

TYPICAL CROSS SECTIONS

NO SCALE

X-15

STATE OF CALIFORNIA - DEPARTMENT OF TRANSPORTATION

Caltrans®

CONSULTANT FUNCTIONAL SUPERVISOR

CALCULATED-DESIGNED BY

CHECKED BY

REVISED BY

DATE REVISED

LAST REVISION 00-00-00

DATE PLOTTED => 10/8/2015
TIME PLOTTED => 2:35:19 PM

Dist	COUNTY	ROUTE	POST MILES TOTAL PROJECT	SHEET No.	TOTAL SHEETS
08	SBd	10	4.7/R37.0		

REGISTERED CIVIL ENGINEER DATE

PLANS APPROVAL DATE

REGISTERED PROFESSIONAL ENGINEER No. Exp. CIVIL STATE OF CALIFORNIA

THE STATE OF CALIFORNIA OR ITS OFFICERS OR AGENTS SHALL NOT BE RESPONSIBLE FOR THE ACCURACY OR COMPLETENESS OF SCANNED COPIES OF THIS PLAN SHEET.

PARSONS
2201 DUPONT DRIVE
SUITE 200
IRVINE, CA 92612

SAN BERNARDINO
ASSOCIATED GOVERNMENTS
1170 W. 3RD STREET
SAN BERNARDINO, CA 92410

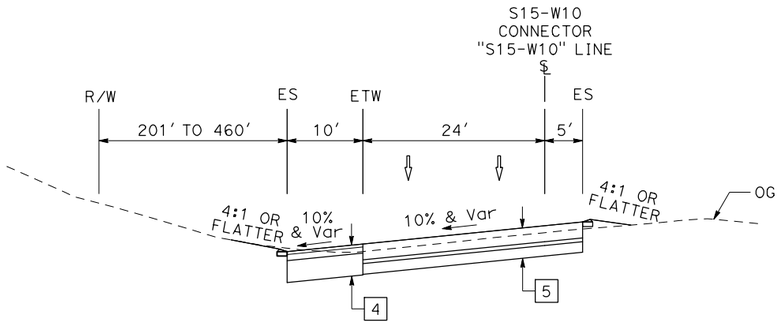

S15-W10 CONNECTOR

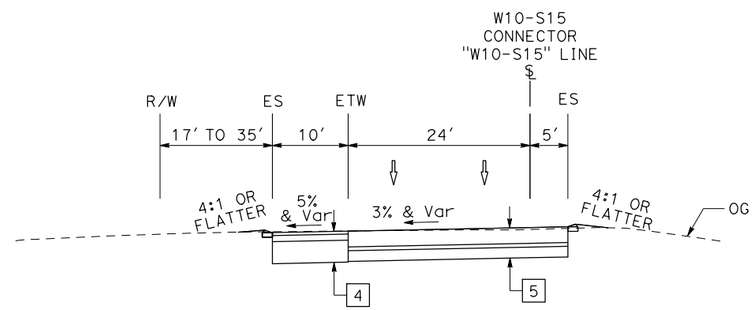

W10-S15 CONNECTOR

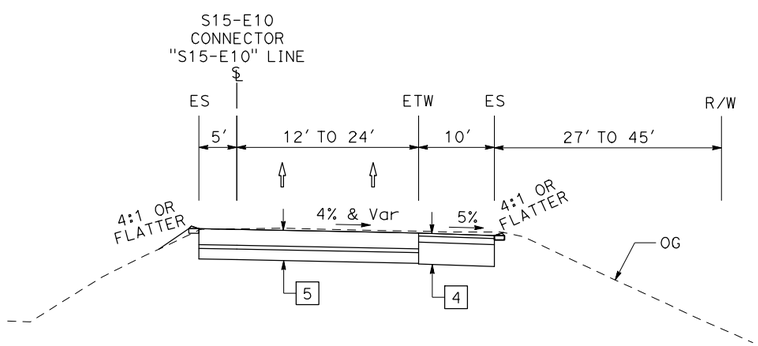

S15-E10 CONNECTOR

I-10 CORRIDOR PROJECT
ALTERNATIVE 2 - HOV

TYPICAL CROSS SECTIONS

NO SCALE

X-16

LAST REVISION 00-00-00
DATE PLOTTED => 10/8/2015
TIME PLOTTED => 2:35:35 PM

STATE OF CALIFORNIA - DEPARTMENT OF TRANSPORTATION
Caltrans
CONSULTANT FUNCTIONAL SUPERVISOR
CALCULATED-DESIGNED BY
CHECKED BY
REVISED BY
DATE REVISED

Dist	COUNTY	ROUTE	POST MILES TOTAL PROJECT	SHEET No.	TOTAL SHEETS
08	SBd	10	4.7/R37.0		

REGISTERED CIVIL ENGINEER DATE

PLANS APPROVAL DATE

REGISTERED PROFESSIONAL ENGINEER No. Exp. CIVIL STATE OF CALIFORNIA

THE STATE OF CALIFORNIA OR ITS OFFICERS OR AGENTS SHALL NOT BE RESPONSIBLE FOR THE ACCURACY OR COMPLETENESS OF SCANNED COPIES OF THIS PLAN SHEET.

PARSONS
2201 DUPONT DRIVE
SUITE 200
IRVINE, CA 92612

SAN BERNARDINO
ASSOCIATED GOVERNMENTS
1170 W. 3RD STREET
SAN BERNARDINO, CA 92410

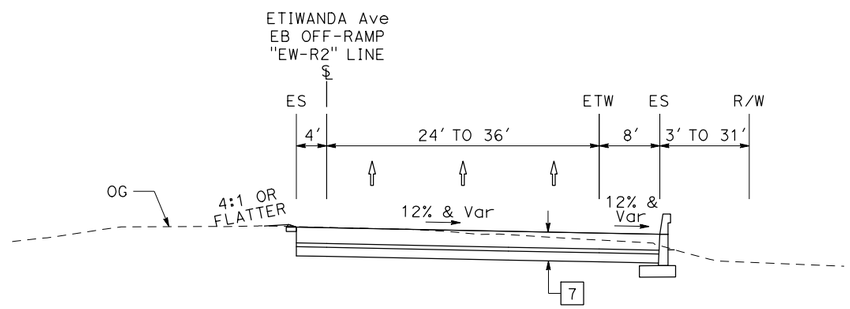

ETIWANDA Ave EB OFF-RAMP

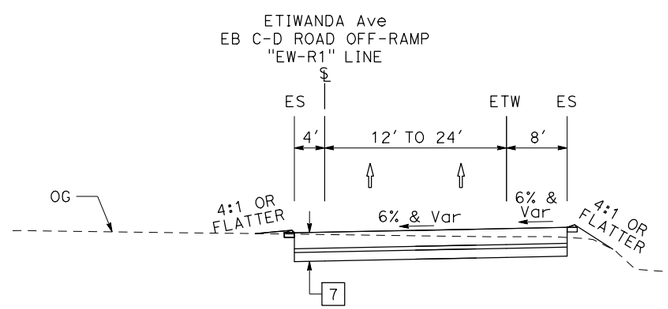

ETIWANDA Ave EB C-D ROAD OFF-RAMP

I-10 CORRIDOR PROJECT
ALTERNATIVE 2 - HOV

TYPICAL CROSS SECTIONS

NO SCALE

X-17

STATE OF CALIFORNIA - DEPARTMENT OF TRANSPORTATION

Caltrans

CONSULTANT FUNCTIONAL SUPERVISOR

CALCULATED-DESIGNED BY

CHECKED BY

REVISED BY

DATE REVISED

LAST REVISION 00-00-00

DATE PLOTTED => 10/8/2015
TIME PLOTTED => 2:35:53 PM

Dist	COUNTY	ROUTE	POST MILES TOTAL PROJECT	SHEET No.	TOTAL SHEETS
08	SBd	10	4.7/R37.0		

REGISTERED CIVIL ENGINEER DATE

PLANS APPROVAL DATE

REGISTERED PROFESSIONAL ENGINEER No. Exp. CIVIL STATE OF CALIFORNIA

THE STATE OF CALIFORNIA OR ITS OFFICERS OR AGENTS SHALL NOT BE RESPONSIBLE FOR THE ACCURACY OR COMPLETENESS OF SCANNED COPIES OF THIS PLAN SHEET.

PARSONS
2201 DUPONT DRIVE
SUITE 200
IRVINE, CA 92612

SAN BERNARDINO
ASSOCIATED GOVERNMENTS
1170 W. 3RD STREET
SAN BERNARDINO, CA 92410

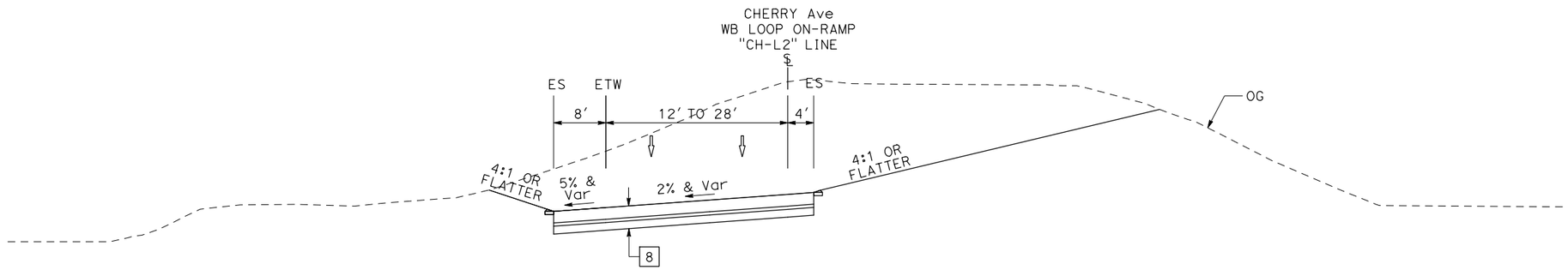

CHERRY Ave WB LOOP ON-RAMP

I-10 CORRIDOR PROJECT
ALTERNATIVE 2 - HOV

TYPICAL CROSS SECTIONS

NO SCALE

X-18

REVISED BY | DATE REVISED
CALCULATED-DESIGNED BY | CHECKED BY
CONSULTANT FUNCTIONAL SUPERVISOR
STATE OF CALIFORNIA - DEPARTMENT OF TRANSPORTATION
Caltrans

LAST REVISION 00-00-00 | DATE PLOTTED => 10/8/2015 TIME PLOTTED => 2:36:08 PM

Dist	COUNTY	ROUTE	POST MILES TOTAL PROJECT	SHEET No.	TOTAL SHEETS
08	SBd	10	4.7/R37.0		

REGISTERED CIVIL ENGINEER DATE

PLANS APPROVAL DATE

REGISTERED PROFESSIONAL ENGINEER No. Exp. CIVIL STATE OF CALIFORNIA

THE STATE OF CALIFORNIA OR ITS OFFICERS OR AGENTS SHALL NOT BE RESPONSIBLE FOR THE ACCURACY OR COMPLETENESS OF SCANNED COPIES OF THIS PLAN SHEET.

PARSONS
2201 DUPONT DRIVE
SUITE 200
IRVINE, CA 92612

SAN BERNARDINO
ASSOCIATED GOVERNMENTS
1170 W. 3RD STREET
SAN BERNARDINO, CA 92410

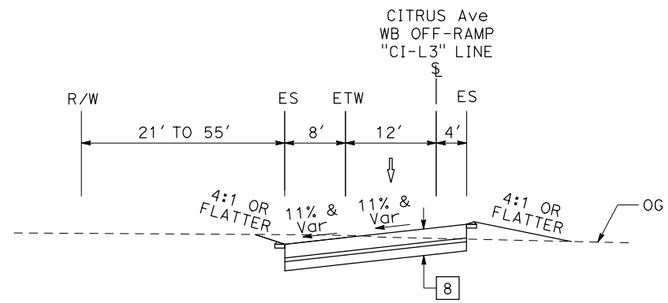

CITRUS Ave WB OFF-RAMP

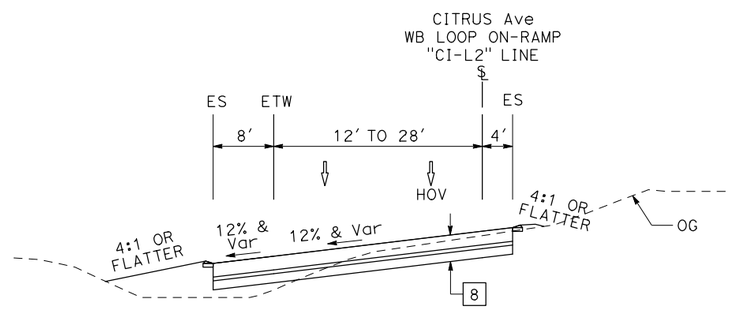

CITRUS Ave WB LOOP ON-RAMP

I-10 CORRIDOR PROJECT
ALTERNATIVE 2 - HOV

TYPICAL CROSS SECTIONS

NO SCALE

X-19

STATE OF CALIFORNIA - DEPARTMENT OF TRANSPORTATION

Caltrans®

CONSULTANT FUNCTIONAL SUPERVISOR

CALCULATED-DESIGNED BY

CHECKED BY

REVISED BY

DATE REVISED

LAST REVISION 00-00-00

DATE PLOTTED => 10/8/2015
TIME PLOTTED => 2:36:24 PM

Dist	COUNTY	ROUTE	POST MILES TOTAL PROJECT	SHEET No.	TOTAL SHEETS
08	SBd	10	4.7/R37.0		

REGISTERED CIVIL ENGINEER DATE

PLANS APPROVAL DATE

REGISTERED PROFESSIONAL ENGINEER No. Exp. CIVIL STATE OF CALIFORNIA

THE STATE OF CALIFORNIA OR ITS OFFICERS OR AGENTS SHALL NOT BE RESPONSIBLE FOR THE ACCURACY OR COMPLETENESS OF SCANNED COPIES OF THIS PLAN SHEET.

PARSONS
2201 DUPONT DRIVE
SUITE 200
IRVINE, CA 92612

SAN BERNARDINO
ASSOCIATED GOVERNMENTS
1170 W. 3RD STREET
SAN BERNARDINO, CA 92410

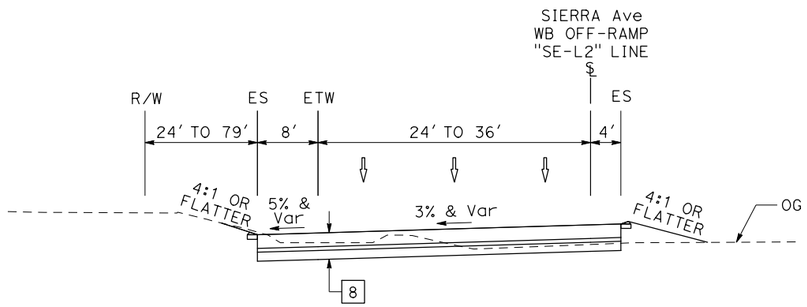

SIERRA Ave WB OFF-RAMP

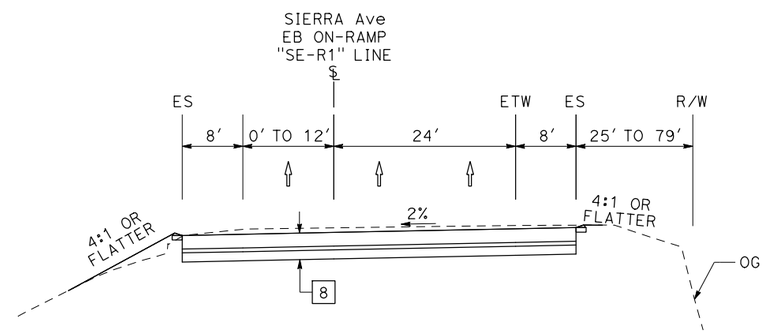

SIERRA Ave EB OFF-RAMP

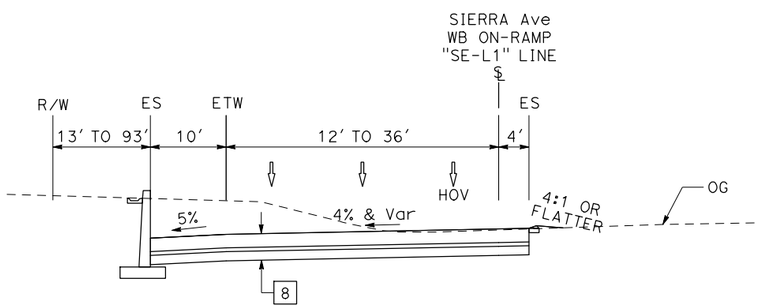

SIERRA Ave WB ON-RAMP

I-10 CORRIDOR PROJECT
ALTERNATIVE 2 - HOV
TYPICAL CROSS SECTIONS

NO SCALE

X-20

STATE OF CALIFORNIA - DEPARTMENT OF TRANSPORTATION
Caltrans
CONSULTANT FUNCTIONAL SUPERVISOR
CALCULATED-DESIGNED BY
CHECKED BY
REVISED BY
DATE REVISED

LAST REVISION 00-00-00
DATE PLOTTED => 10/8/2015
TIME PLOTTED => 2:36:34 PM

Dist	COUNTY	ROUTE	POST MILES TOTAL PROJECT	SHEET No.	TOTAL SHEETS
08	SBd	10	4.7/R37.0		

REGISTERED CIVIL ENGINEER DATE

PLANS APPROVAL DATE

REGISTERED PROFESSIONAL ENGINEER No. Exp. CIVIL STATE OF CALIFORNIA

THE STATE OF CALIFORNIA OR ITS OFFICERS OR AGENTS SHALL NOT BE RESPONSIBLE FOR THE ACCURACY OR COMPLETENESS OF SCANNED COPIES OF THIS PLAN SHEET.

PARSONS
2201 DUPONT DRIVE
SUITE 200
IRVINE, CA 92612

SAN BERNARDINO
ASSOCIATED GOVERNMENTS
1170 W. 3RD STREET
SAN BERNARDINO, CA 92410

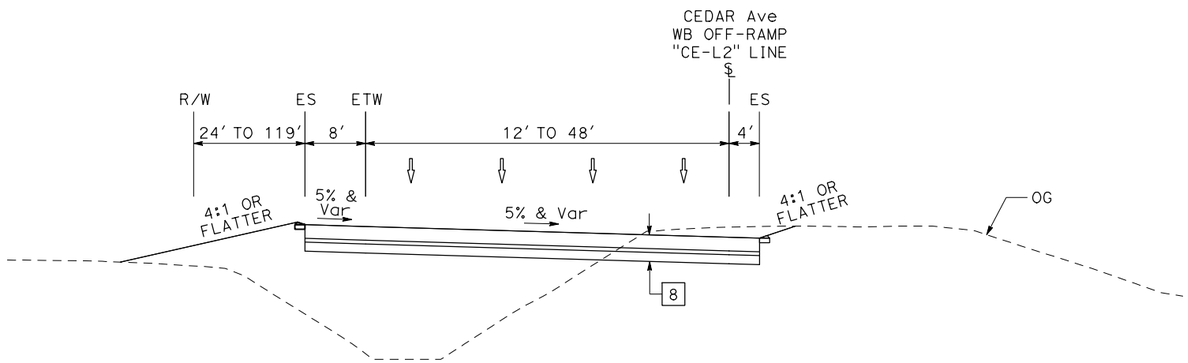

CEDAR Ave WB OFF-RAMP

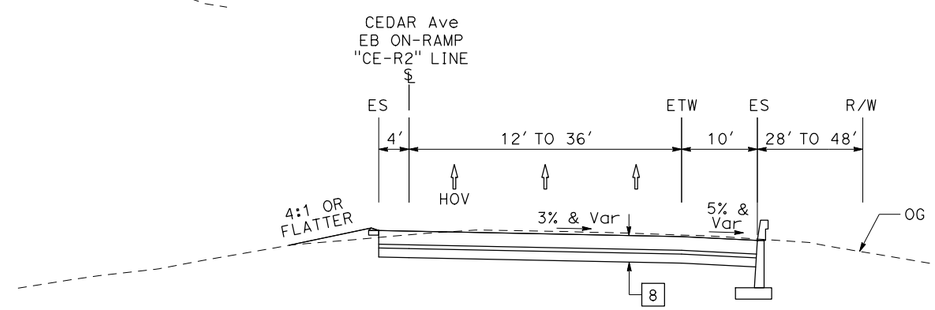

CEDAR Ave EB ON-RAMP

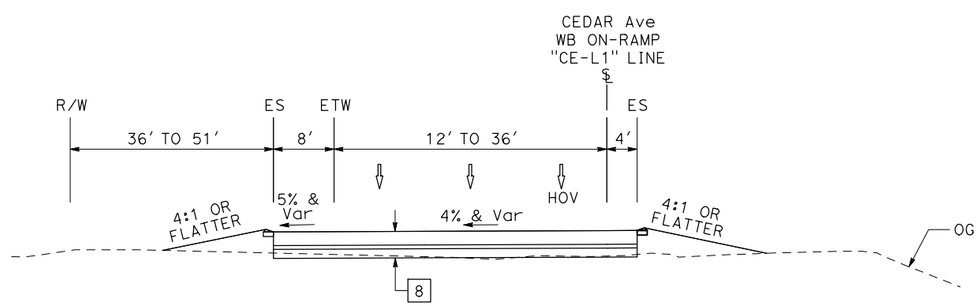

CEDAR Ave WB ON-RAMP

I-10 CORRIDOR PROJECT
ALTERNATIVE 2 - HOV
TYPICAL CROSS SECTIONS

NO SCALE

X-21

STATE OF CALIFORNIA - DEPARTMENT OF TRANSPORTATION

Caltrans

CONSULTANT FUNCTIONAL SUPERVISOR

CALCULATED-DESIGNED BY

CHECKED BY

REVISED BY

DATE REVISED

LAST REVISION 00-00-00

DATE PLOTTED => 10/8/2015
TIME PLOTTED => 2:36:48 PM

Dist	COUNTY	ROUTE	POST MILES TOTAL PROJECT	SHEET No.	TOTAL SHEETS
08	SBd	10	4.7/R37.0		

REGISTERED CIVIL ENGINEER DATE

PLANS APPROVAL DATE

REGISTERED PROFESSIONAL ENGINEER No. Exp. CIVIL STATE OF CALIFORNIA

THE STATE OF CALIFORNIA OR ITS OFFICERS OR AGENTS SHALL NOT BE RESPONSIBLE FOR THE ACCURACY OR COMPLETENESS OF SCANNED COPIES OF THIS PLAN SHEET.

PARSONS
2201 DUPONT DRIVE
SUITE 200
IRVINE, CA 92612

SAN BERNARDINO
ASSOCIATED GOVERNMENTS
1170 W. 3RD STREET
SAN BERNARDINO, CA 92410

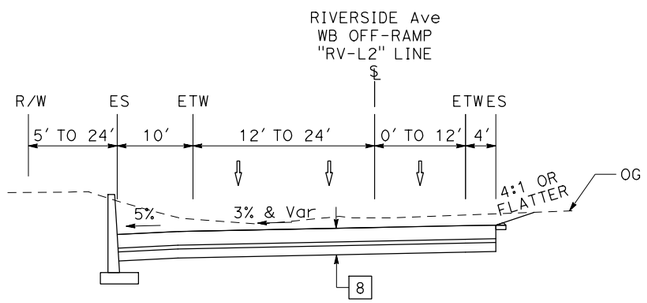

RIVERSIDE Ave WB OFF-RAMP

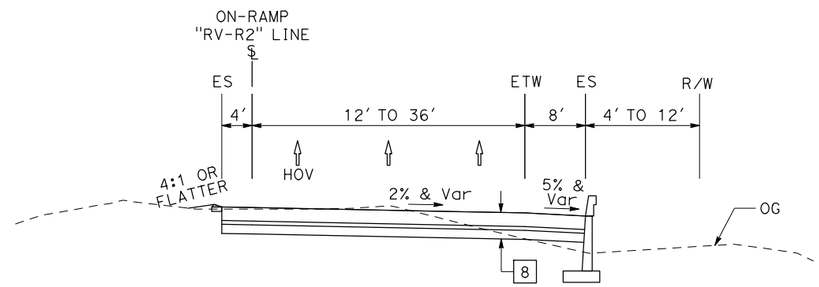

RIVERSIDE Ave EB ON-RAMP

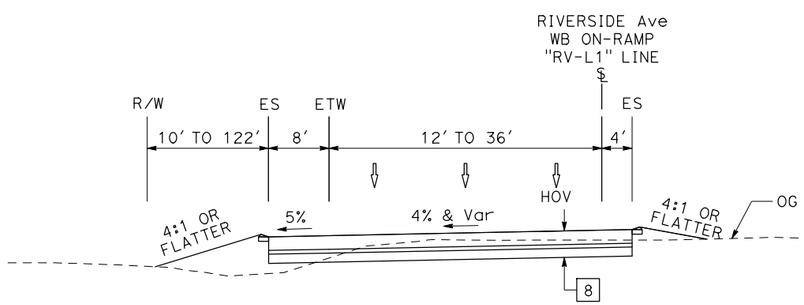

RIVERSIDE Ave WB ON-RAMP

I-10 CORRIDOR PROJECT
ALTERNATIVE 2 - HOV

TYPICAL CROSS SECTIONS

NO SCALE

X-22

STATE OF CALIFORNIA - DEPARTMENT OF TRANSPORTATION
Caltrans

CONSULTANT FUNCTIONAL SUPERVISOR | CALCULATED-DESIGNED BY | CHECKED BY | REVISED BY | DATE REVISED

LAST REVISION 00-00-00 | DATE PLOTTED => 10/8/2015 | TIME PLOTTED => 2:37:04 PM

Dist	COUNTY	ROUTE	POST MILES TOTAL PROJECT	SHEET No.	TOTAL SHEETS
08	SBd	10	4.7/R37.0		

REGISTERED CIVIL ENGINEER DATE

PLANS APPROVAL DATE

REGISTERED PROFESSIONAL ENGINEER No. Exp. CIVIL STATE OF CALIFORNIA

THE STATE OF CALIFORNIA OR ITS OFFICERS OR AGENTS SHALL NOT BE RESPONSIBLE FOR THE ACCURACY OR COMPLETENESS OF SCANNED COPIES OF THIS PLAN SHEET.

PARSONS
2201 DUPONT DRIVE
SUITE 200
IRVINE, CA 92612

SAN BERNARDINO
ASSOCIATED GOVERNMENTS
1170 W. 3RD STREET
SAN BERNARDINO, CA 92410

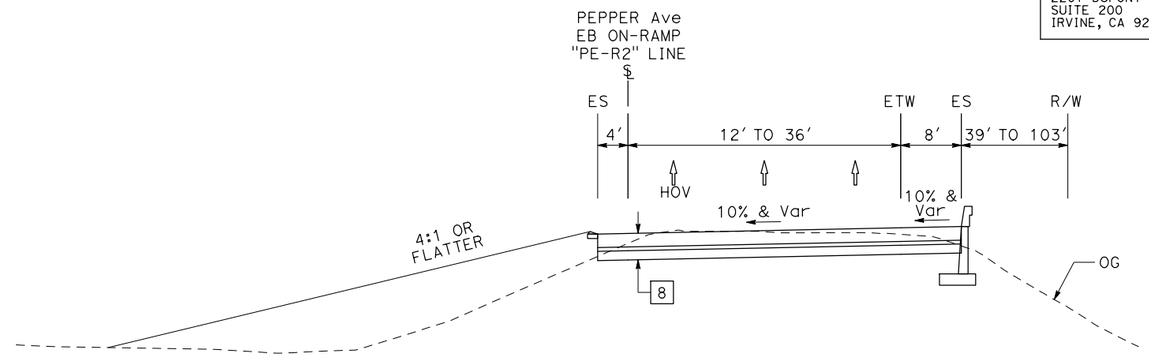

PEPPER Ave EB ON-RAMP

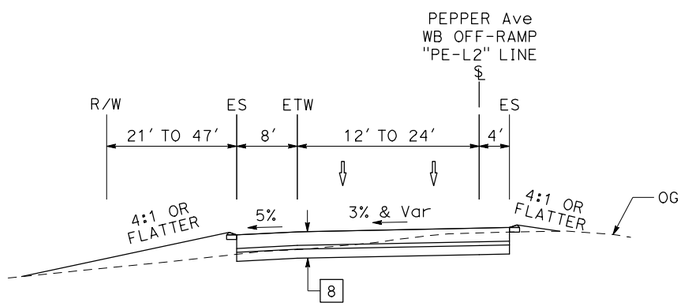

PEPPER Ave WB OFF-RAMP

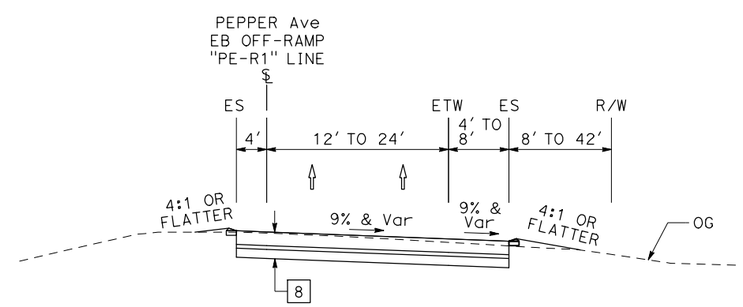

PEPPER Ave EB OFF-RAMP

I-10 CORRIDOR PROJECT
ALTERNATIVE 2 - HOV

TYPICAL CROSS SECTIONS

NO SCALE

X-23

STATE OF CALIFORNIA - DEPARTMENT OF TRANSPORTATION

Caltrans

CONSULTANT FUNCTIONAL SUPERVISOR

CALCULATED-DESIGNED BY

CHECKED BY

REVISED BY

DATE REVISED

LAST REVISION 00-00-00

DATE PLOTTED => 10/8/2015
TIME PLOTTED => 2:37:22 PM

Dist	COUNTY	ROUTE	POST MILES TOTAL PROJECT	SHEET No.	TOTAL SHEETS
08	SBd	10	4.7/R37.0		

REGISTERED CIVIL ENGINEER DATE

PLANS APPROVAL DATE

REGISTERED PROFESSIONAL ENGINEER No. Exp. CIVIL STATE OF CALIFORNIA

THE STATE OF CALIFORNIA OR ITS OFFICERS OR AGENTS SHALL NOT BE RESPONSIBLE FOR THE ACCURACY OR COMPLETENESS OF SCANNED COPIES OF THIS PLAN SHEET.

PARSONS
2201 DUPONT DRIVE
SUITE 200
IRVINE, CA 92612

SAN BERNARDINO
ASSOCIATED GOVERNMENTS
1170 W. 3RD STREET
SAN BERNARDINO, CA 92410

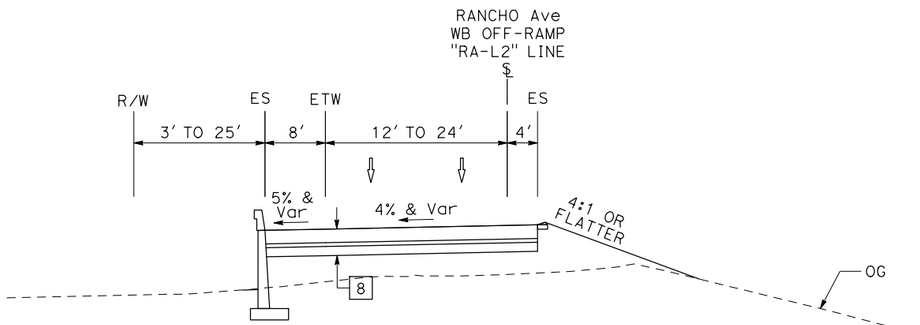

RANCHO Ave WB OFF-RAMP

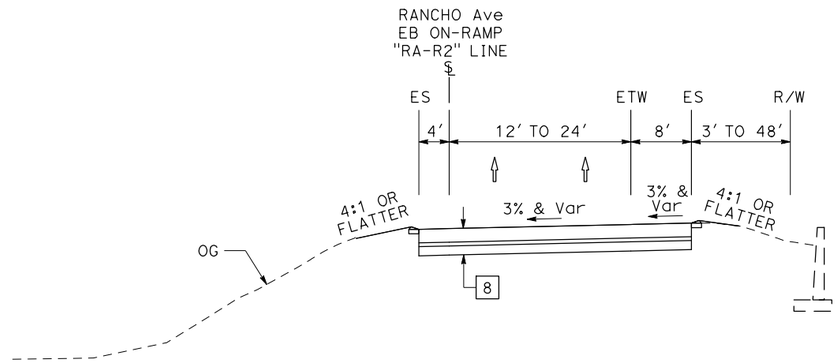

RANCHO Ave EB ON-RAMP

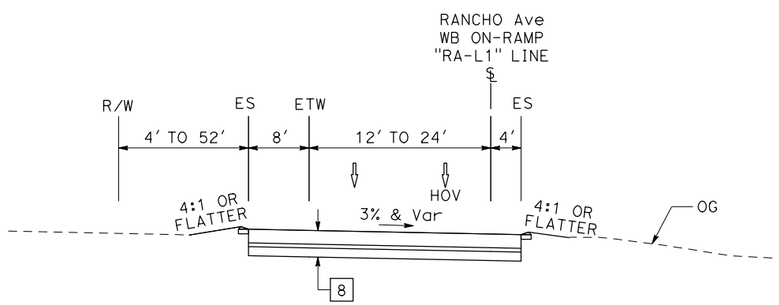

RANCHO Ave WB ON-RAMP

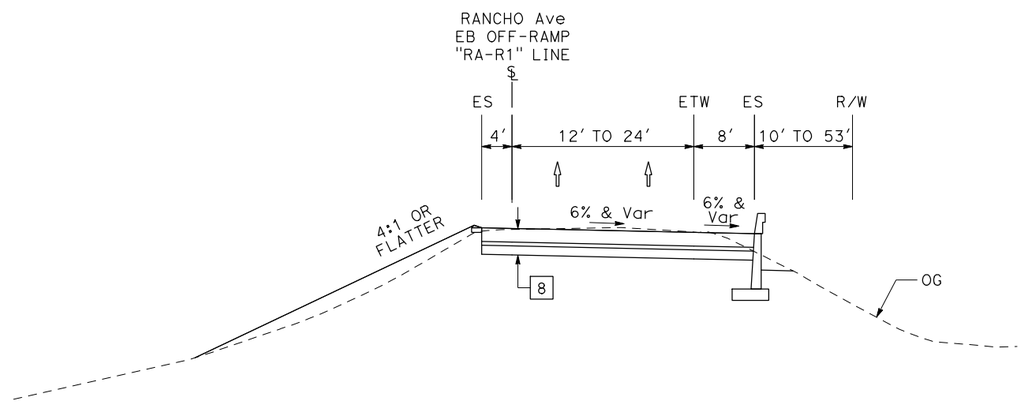

RANCHO Ave EB OFF-RAMP

I-10 CORRIDOR PROJECT
ALTERNATIVE 2 - HOV

TYPICAL CROSS SECTIONS

NO SCALE

X-24

STATE OF CALIFORNIA - DEPARTMENT OF TRANSPORTATION

Caltrans

CONSULTANT FUNCTIONAL SUPERVISOR

CALCULATED-DESIGNED BY

CHECKED BY

REVISED BY

DATE REVISED

LAST REVISION 00-00-00

DATE PLOTTED => 10/8/2015
TIME PLOTTED => 2:37:44 PM

Dist	COUNTY	ROUTE	POST MILES TOTAL PROJECT	SHEET No.	TOTAL SHEETS
08	SBd	10	4.7/R37.0		

REGISTERED CIVIL ENGINEER DATE

PLANS APPROVAL DATE

REGISTERED PROFESSIONAL ENGINEER No. Exp. CIVIL STATE OF CALIFORNIA

THE STATE OF CALIFORNIA OR ITS OFFICERS OR AGENTS SHALL NOT BE RESPONSIBLE FOR THE ACCURACY OR COMPLETENESS OF SCANNED COPIES OF THIS PLAN SHEET.

PARSONS
2201 DUPONT DRIVE
SUITE 200
IRVINE, CA 92612

SAN BERNARDINO
ASSOCIATED GOVERNMENTS
1170 W. 3RD STREET
SAN BERNARDINO, CA 92410

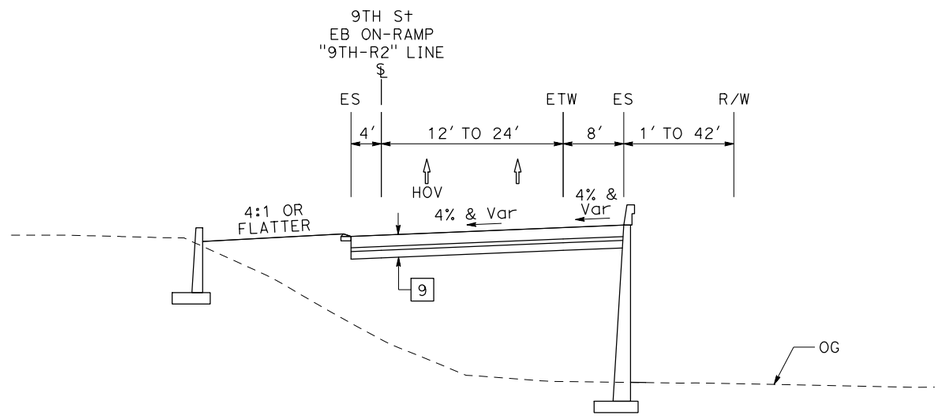

9TH St EB ON-RAMP

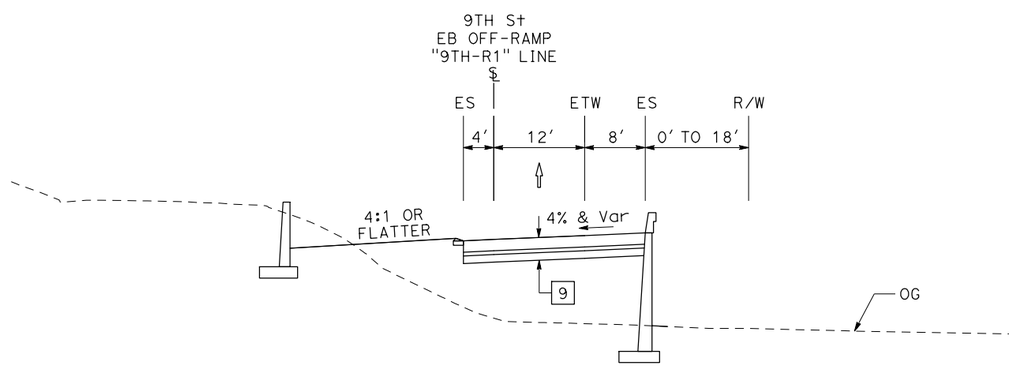

9TH St EB OFF-RAMP

I-10 CORRIDOR PROJECT
ALTERNATIVE 2 - HOV

TYPICAL CROSS SECTIONS

NO SCALE

X-25

STATE OF CALIFORNIA - DEPARTMENT OF TRANSPORTATION

Caltrans

CONSULTANT FUNCTIONAL SUPERVISOR

CALCULATED-DESIGNED BY

CHECKED BY

REVISED BY

DATE REVISED

LAST REVISION 00-00-00

DATE PLOTTED => 10/8/2015
TIME PLOTTED => 5:24:42 PM

Dist	COUNTY	ROUTE	POST MILES TOTAL PROJECT	SHEET No.	TOTAL SHEETS
08	SBd	10	4.7/R37.0		

REGISTERED CIVIL ENGINEER DATE

PLANS APPROVAL DATE

REGISTERED PROFESSIONAL ENGINEER No. Exp. CIVIL STATE OF CALIFORNIA

THE STATE OF CALIFORNIA OR ITS OFFICERS OR AGENTS SHALL NOT BE RESPONSIBLE FOR THE ACCURACY OR COMPLETENESS OF SCANNED COPIES OF THIS PLAN SHEET.

PARSONS
2201 DUPONT DRIVE
SUITE 200
IRVINE, CA 92612

SAN BERNARDINO
ASSOCIATED GOVERNMENTS
1170 W. 3RD STREET
SAN BERNARDINO, CA 92410

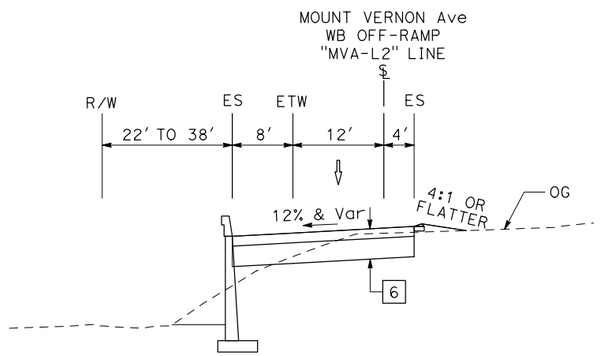

MOUNT VERNON Ave WB OFF-RAMP

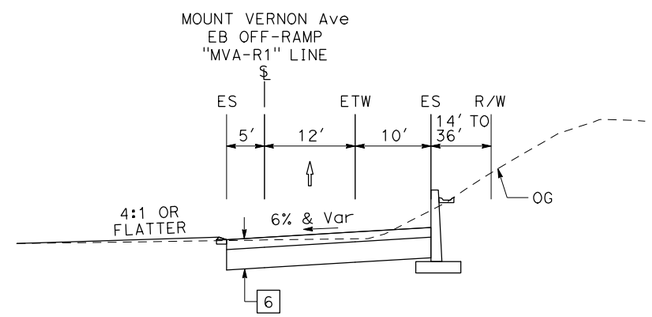

MOUNT VERNON Ave EB OFF-RAMP

I-10 CORRIDOR PROJECT
ALTERNATIVE 2 - HOV

TYPICAL CROSS SECTIONS

NO SCALE

X-26

STATE OF CALIFORNIA - DEPARTMENT OF TRANSPORTATION
Caltrans

CONSULTANT FUNCTIONAL SUPERVISOR

CALCULATED-DESIGNED BY

CHECKED BY

REVISED BY

DATE REVISED

LAST REVISION 00-00-00

DATE PLOTTED => 10/8/2015
TIME PLOTTED => 2:38:17 PM

Dist	COUNTY	ROUTE	POST MILES TOTAL PROJECT	SHEET No.	TOTAL SHEETS
08	SBd	10	4.7/R37.0		

REGISTERED CIVIL ENGINEER DATE

PLANS APPROVAL DATE

REGISTERED PROFESSIONAL ENGINEER No. Exp. CIVIL STATE OF CALIFORNIA

THE STATE OF CALIFORNIA OR ITS OFFICERS OR AGENTS SHALL NOT BE RESPONSIBLE FOR THE ACCURACY OR COMPLETENESS OF SCANNED COPIES OF THIS PLAN SHEET.

PARSONS
2201 DUPONT DRIVE
SUITE 200
IRVINE, CA 92612

SAN BERNARDINO
ASSOCIATED GOVERNMENTS
1170 W. 3RD STREET
SAN BERNARDINO, CA 92410

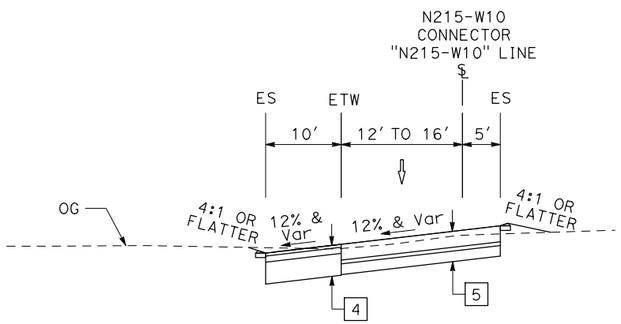

N215-W10 CONNECTOR

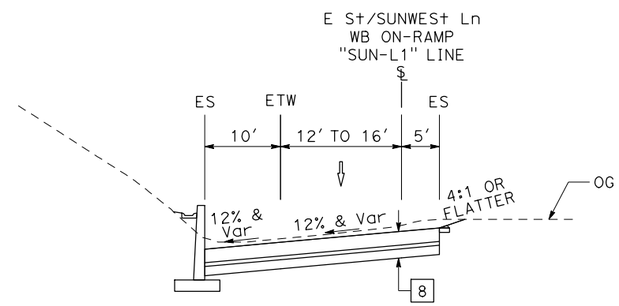

E St/SUNWEST Ln WB ON-RAMP

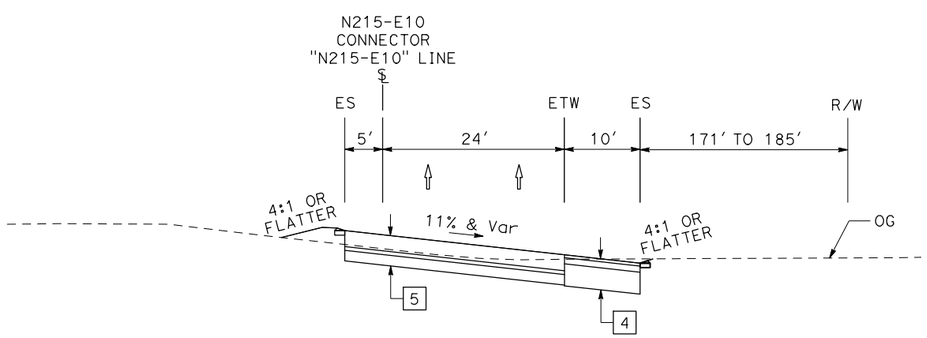

N215-E10 CONNECTOR

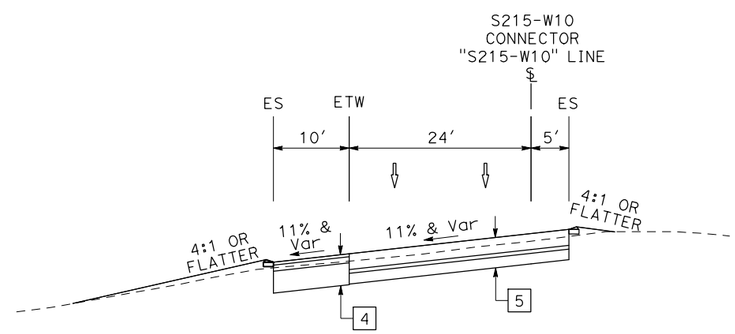

S215-W10 CONNECTOR

I-10 CORRIDOR PROJECT
ALTERNATIVE 2 - HOV

TYPICAL CROSS SECTIONS

NO SCALE

X-27

STATE OF CALIFORNIA - DEPARTMENT OF TRANSPORTATION

Caltrans®

CONSULTANT FUNCTIONAL SUPERVISOR

CALCULATED-DESIGNED BY

CHECKED BY

REVISED BY

DATE REVISED

LAST REVISION 00-00-00

DATE PLOTTED => 10/8/2015
TIME PLOTTED => 2:38:33 PM

Dist	COUNTY	ROUTE	POST MILES TOTAL PROJECT	SHEET No.	TOTAL SHEETS
08	SBd	10	4.7/R37.0		

REGISTERED CIVIL ENGINEER DATE

PLANS APPROVAL DATE

REGISTERED PROFESSIONAL ENGINEER No. Exp. CIVIL STATE OF CALIFORNIA

THE STATE OF CALIFORNIA OR ITS OFFICERS OR AGENTS SHALL NOT BE RESPONSIBLE FOR THE ACCURACY OR COMPLETENESS OF SCANNED COPIES OF THIS PLAN SHEET.

PARSONS
2201 DUPONT DRIVE
SUITE 200
IRVINE, CA 92612

SAN BERNARDINO
ASSOCIATED GOVERNMENTS
1170 W. 3RD STREET
SAN BERNARDINO, CA 92410

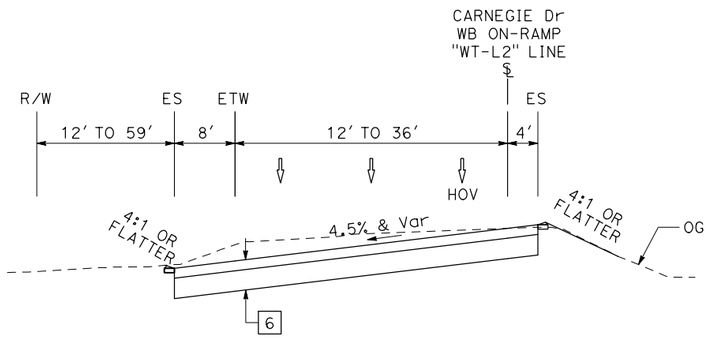

CARNEGIE Dr WB ON-RAMP

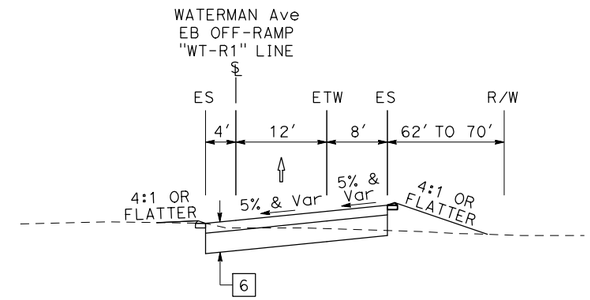

WATERMAN Ave EB OFF-RAMP

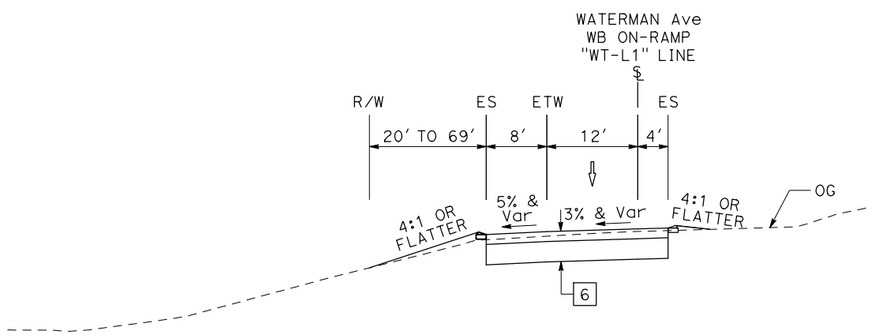

WATERMAN Ave WB ON-RAMP

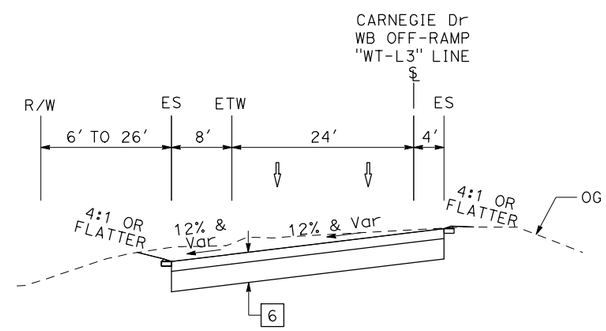

CARNEGIE Dr WB OFF-RAMP

I-10 CORRIDOR PROJECT
ALTERNATIVE 2 - HOV

TYPICAL CROSS SECTIONS

NO SCALE

X-28

STATE OF CALIFORNIA - DEPARTMENT OF TRANSPORTATION
Caltrans

CONSULTANT FUNCTIONAL SUPERVISOR

CALCULATED-DESIGNED BY

CHECKED BY

REVISED BY

DATE REVISED

LAST REVISION 00-00-00

DATE PLOTTED => 10/8/2015
TIME PLOTTED => 2:38:47 PM

Dist	COUNTY	ROUTE	POST MILES TOTAL PROJECT	SHEET No.	TOTAL SHEETS
08	SBd	10	4.7/R37.0		

REGISTERED CIVIL ENGINEER DATE

PLANS APPROVAL DATE

REGISTERED PROFESSIONAL ENGINEER No. Exp. CIVIL STATE OF CALIFORNIA

THE STATE OF CALIFORNIA OR ITS OFFICERS OR AGENTS SHALL NOT BE RESPONSIBLE FOR THE ACCURACY OR COMPLETENESS OF SCANNED COPIES OF THIS PLAN SHEET.

PARSONS
2201 DUPONT DRIVE
SUITE 200
IRVINE, CA 92612

SAN BERNARDINO
ASSOCIATED GOVERNMENTS
1170 W. 3RD STREET
SAN BERNARDINO, CA 92410

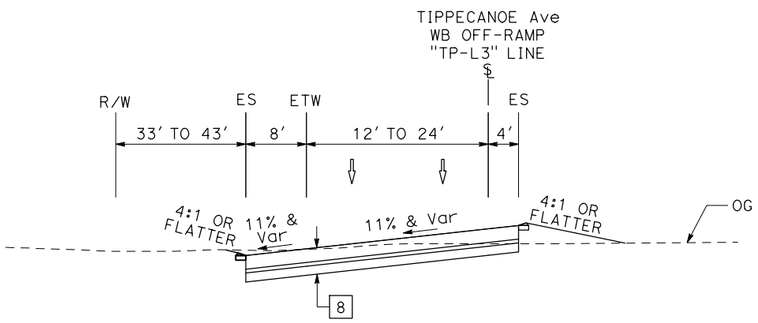

TIPPECANOE Ave WB OFF-RAMP

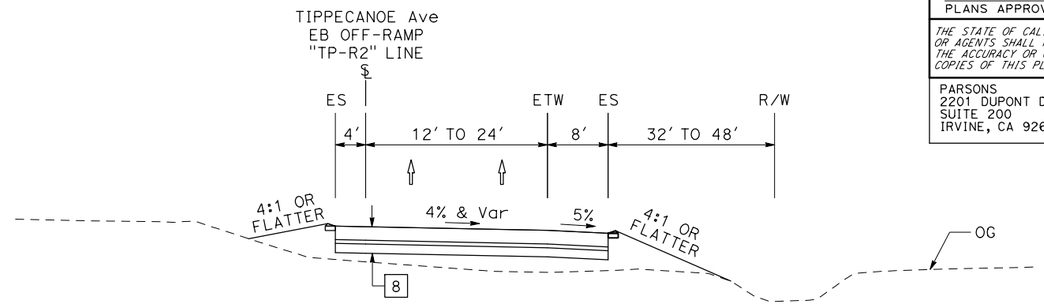

TIPPECANOE Ave EB ON-RAMP

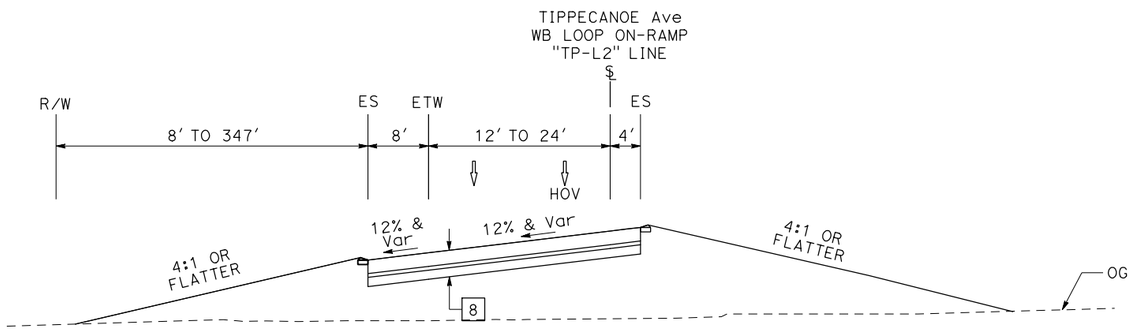

TIPPECANOE Ave WB LOOP ON-RAMP

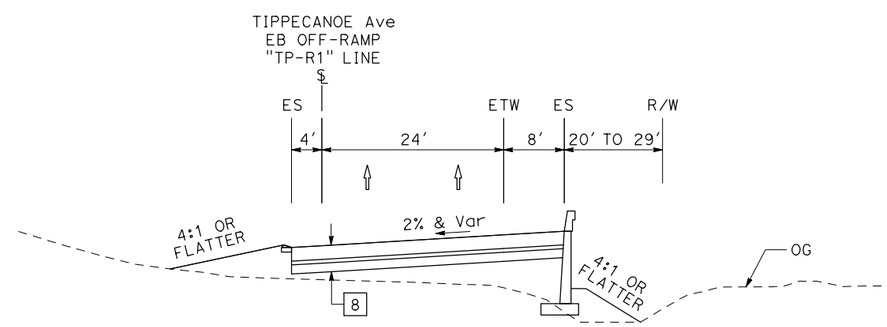

TIPPECANOE Ave EB OFF-RAMP

I-10 CORRIDOR PROJECT
ALTERNATIVE 2 - HOV

TYPICAL CROSS SECTIONS

NO SCALE

X-29

STATE OF CALIFORNIA - DEPARTMENT OF TRANSPORTATION
Caltrans

CONSULTANT FUNCTIONAL SUPERVISOR

CALCULATED-DESIGNED BY | CHECKED BY

REVISED BY | DATE REVISED

LAST REVISION 00-00-00 | DATE PLOTTED => 10/8/2015 | TIME PLOTTED => 2:38:59 PM

Dist	COUNTY	ROUTE	POST MILES TOTAL PROJECT	SHEET No.	TOTAL SHEETS
08	SBd	10	4.7/R37.0		

REGISTERED CIVIL ENGINEER DATE

PLANS APPROVAL DATE

REGISTERED PROFESSIONAL ENGINEER No. Exp. CIVIL STATE OF CALIFORNIA

THE STATE OF CALIFORNIA OR ITS OFFICERS OR AGENTS SHALL NOT BE RESPONSIBLE FOR THE ACCURACY OR COMPLETENESS OF SCANNED COPIES OF THIS PLAN SHEET.

PARSONS
2201 DUPONT DRIVE
SUITE 200
IRVINE, CA 92612

SAN BERNARDINO
ASSOCIATED GOVERNMENTS
1170 W. 3RD STREET
SAN BERNARDINO, CA 92410

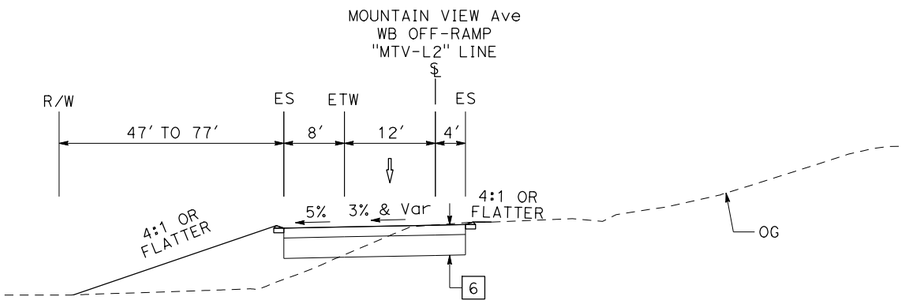

MOUNTAIN VIEW Ave WB OFF-RAMP

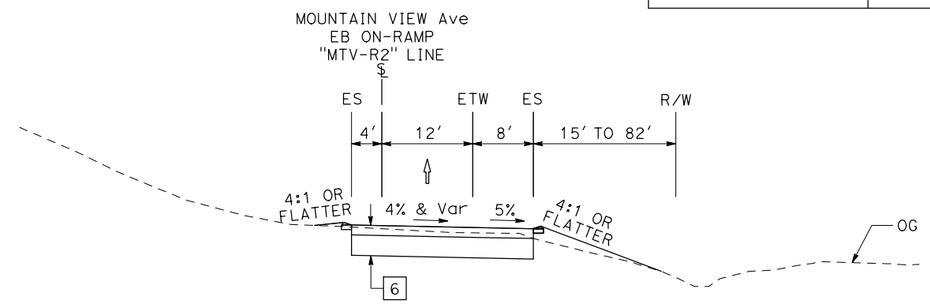

MOUNTAIN VIEW Ave EB ON-RAMP

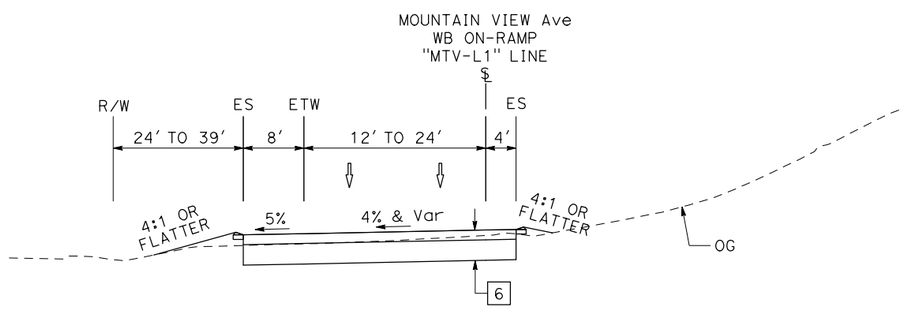

MOUNTAIN VIEW Ave WB ON-RAMP

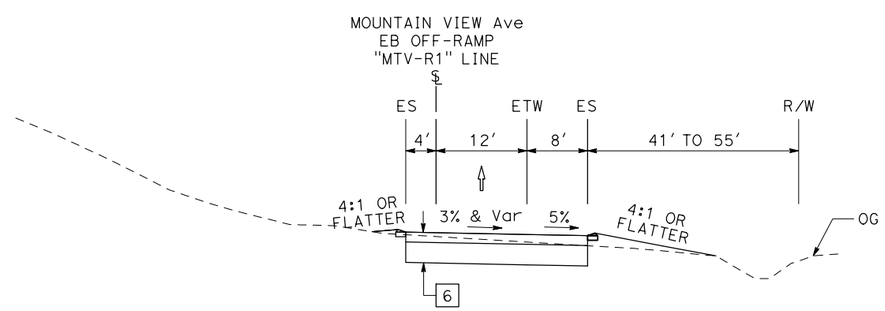

MOUNTAIN VIEW Ave EB OFF-RAMP

I-10 CORRIDOR PROJECT
ALTERNATIVE 2 - HOV
TYPICAL CROSS SECTIONS

NO SCALE

X-30

STATE OF CALIFORNIA - DEPARTMENT OF TRANSPORTATION

Caltrans

CONSULTANT FUNCTIONAL SUPERVISOR

CALCULATED-DESIGNED BY

CHECKED BY

REVISED BY

DATE REVISED

LAST REVISION 00-00-00

DATE PLOTTED => 10/8/2015
TIME PLOTTED => 2:39:14 PM

Dist	COUNTY	ROUTE	POST MILES TOTAL PROJECT	SHEET No.	TOTAL SHEETS
08	SBd	10	4.7/R37.0		

REGISTERED CIVIL ENGINEER DATE

PLANS APPROVAL DATE

REGISTERED PROFESSIONAL ENGINEER No. Exp. CIVIL STATE OF CALIFORNIA

THE STATE OF CALIFORNIA OR ITS OFFICERS OR AGENTS SHALL NOT BE RESPONSIBLE FOR THE ACCURACY OR COMPLETENESS OF SCANNED COPIES OF THIS PLAN SHEET.

PARSONS
2201 DUPONT DRIVE
SUITE 200
IRVINE, CA 92612

SAN BERNARDINO
ASSOCIATED GOVERNMENTS
1170 W. 3RD STREET
SAN BERNARDINO, CA 92410

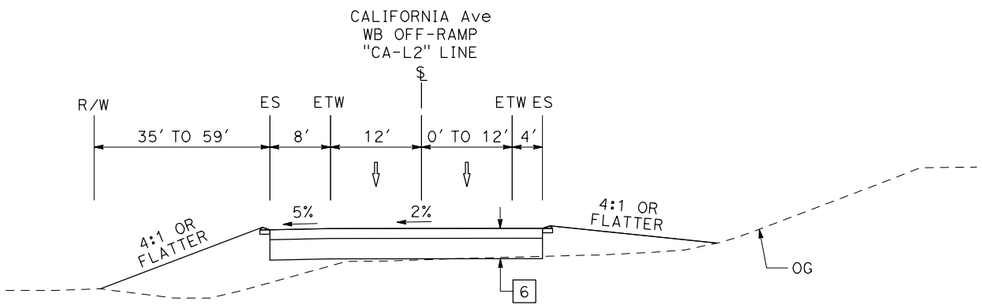

CALIFORNIA Ave WB OFF-RAMP

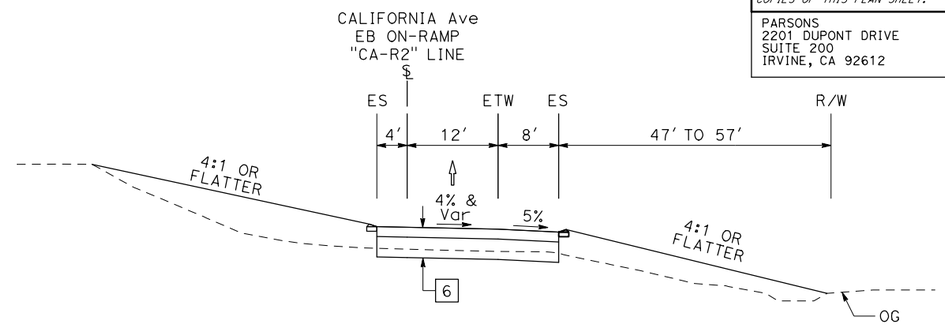

CALIFORNIA Ave EB ON-RAMP

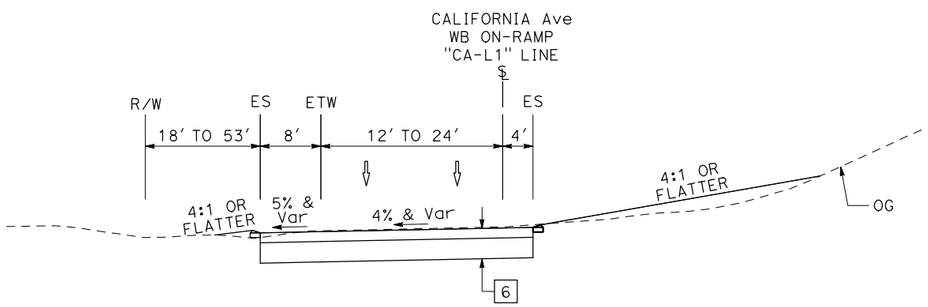

CALIFORNIA Ave WB ON-RAMP

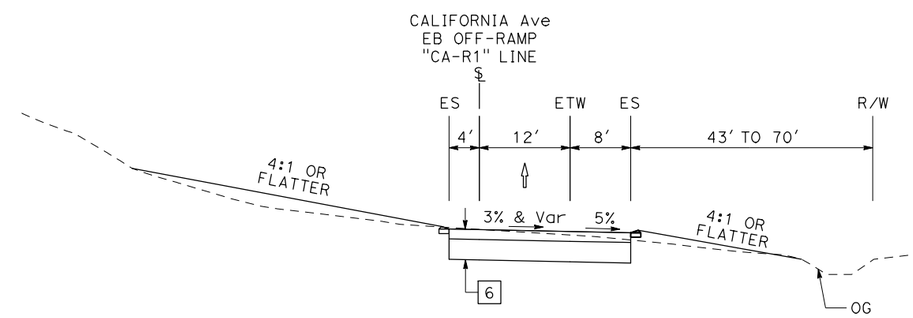

CALIFORNIA Ave EB OFF-RAMP

I-10 CORRIDOR PROJECT
ALTERNATIVE 2 - HOV

TYPICAL CROSS SECTIONS

NO SCALE

X-31

STATE OF CALIFORNIA - DEPARTMENT OF TRANSPORTATION

Caltrans

CONSULTANT FUNCTIONAL SUPERVISOR

CALCULATED-DESIGNED BY

CHECKED BY

REVISED BY

DATE REVISED

LAST REVISION 00-00-00

DATE PLOTTED => 10/8/2015
TIME PLOTTED => 2:39:28 PM

Dist	COUNTY	ROUTE	POST MILES TOTAL PROJECT	SHEET No.	TOTAL SHEETS
08	SBd	10	4.7/R37.0		

REGISTERED CIVIL ENGINEER DATE

PLANS APPROVAL DATE

REGISTERED PROFESSIONAL ENGINEER No. Exp. CIVIL STATE OF CALIFORNIA

THE STATE OF CALIFORNIA OR ITS OFFICERS OR AGENTS SHALL NOT BE RESPONSIBLE FOR THE ACCURACY OR COMPLETENESS OF SCANNED COPIES OF THIS PLAN SHEET.

PARSONS
2201 DUPONT DRIVE
SUITE 200
IRVINE, CA 92612

SAN BERNARDINO
ASSOCIATED GOVERNMENTS
1170 W. 3RD STREET
SAN BERNARDINO, CA 92410

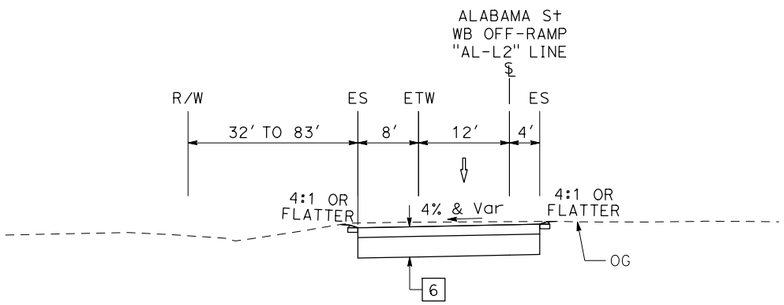

ALABAMA St WB OFF-RAMP

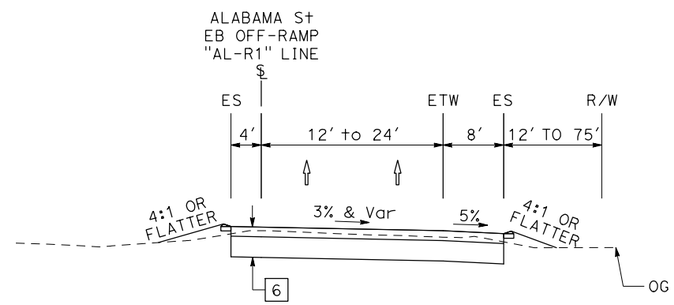

ALABAMA St EB OFF-RAMP

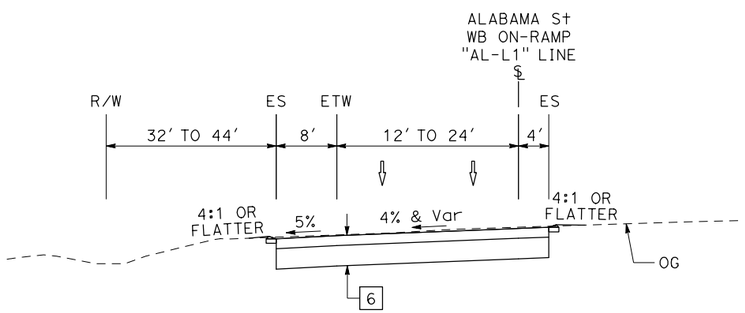

ALABAMA St WB ON-RAMP

I-10 CORRIDOR PROJECT
ALTERNATIVE 2 - HOV

TYPICAL CROSS SECTIONS

NO SCALE

X-32

STATE OF CALIFORNIA - DEPARTMENT OF TRANSPORTATION
Caltrans

CONSULTANT FUNCTIONAL SUPERVISOR

CALCULATED-DESIGNED BY | CHECKED BY

REVISED BY | DATE REVISED

LAST REVISION 00-00-00 | DATE PLOTTED => 10/8/2015 TIME PLOTTED => 2:39:45 PM

Dist	COUNTY	ROUTE	POST MILES TOTAL PROJECT	SHEET No.	TOTAL SHEETS
08	SBd	10	4.7/R37.0		

REGISTERED CIVIL ENGINEER DATE

PLANS APPROVAL DATE

REGISTERED PROFESSIONAL ENGINEER No. Exp. CIVIL STATE OF CALIFORNIA

THE STATE OF CALIFORNIA OR ITS OFFICERS OR AGENTS SHALL NOT BE RESPONSIBLE FOR THE ACCURACY OR COMPLETENESS OF SCANNED COPIES OF THIS PLAN SHEET.

PARSONS
2201 DUPONT DRIVE
SUITE 200
IRVINE, CA 92612

SAN BERNARDINO
ASSOCIATED GOVERNMENTS
1170 W. 3RD STREET
SAN BERNARDINO, CA 92410

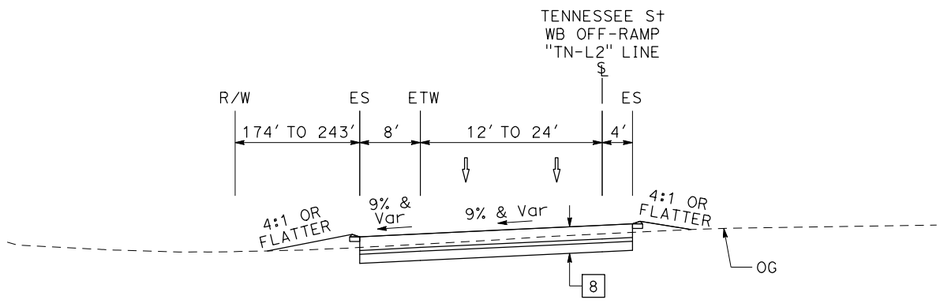

TENNESSEE St WB OFF-RAMP

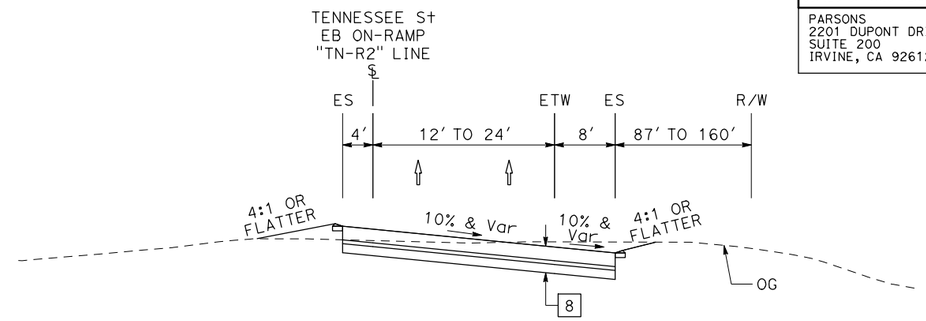

TENNESSEE St EB ON-RAMP

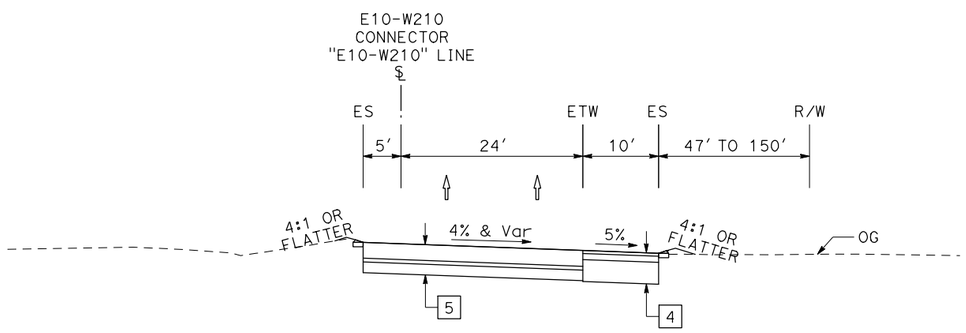

E10-W210 CONNECTOR

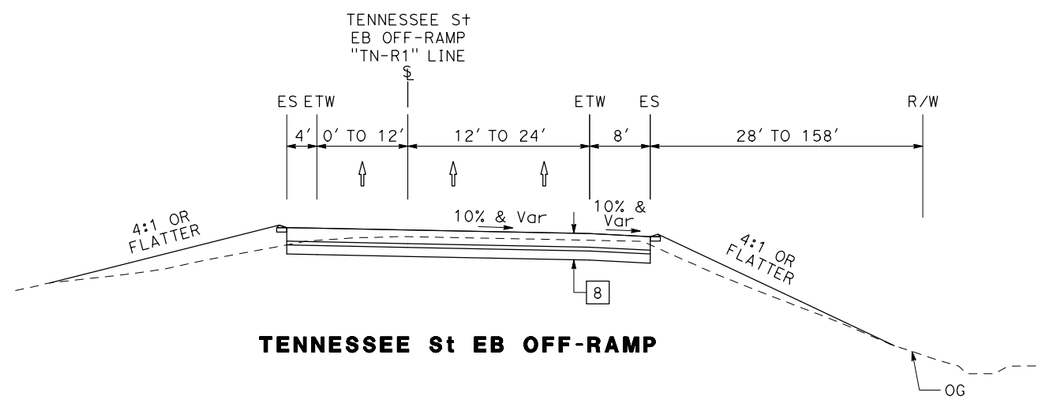

TENNESSEE St EB OFF-RAMP

I-10 CORRIDOR PROJECT
ALTERNATIVE 2 - HOV

TYPICAL CROSS SECTIONS

NO SCALE

X-33

STATE OF CALIFORNIA - DEPARTMENT OF TRANSPORTATION

Caltrans

CONSULTANT FUNCTIONAL SUPERVISOR

CALCULATED-DESIGNED BY

CHECKED BY

REVISED BY

DATE REVISED

LAST REVISION 00-00-00

DATE PLOTTED => 10/8/2015
TIME PLOTTED => 2:40:00 PM

Dist	COUNTY	ROUTE	POST MILES TOTAL PROJECT	SHEET No.	TOTAL SHEETS
08	SBd	10	4.7/R37.0		

REGISTERED CIVIL ENGINEER DATE

PLANS APPROVAL DATE

REGISTERED PROFESSIONAL ENGINEER No. Exp. CIVIL STATE OF CALIFORNIA

THE STATE OF CALIFORNIA OR ITS OFFICERS OR AGENTS SHALL NOT BE RESPONSIBLE FOR THE ACCURACY OR COMPLETENESS OF SCANNED COPIES OF THIS PLAN SHEET.

PARSONS
2201 DUPONT DRIVE
SUITE 200
IRVINE, CA 92612

SAN BERNARDINO
ASSOCIATED GOVERNMENTS
1170 W. 3RD STREET
SAN BERNARDINO, CA 92410

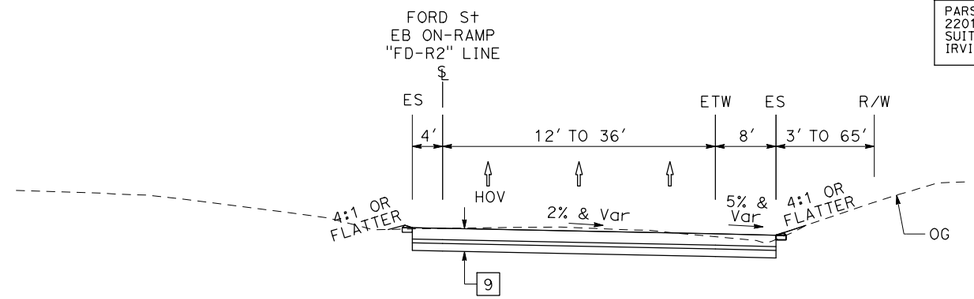

FORD St EB ON-RAMP

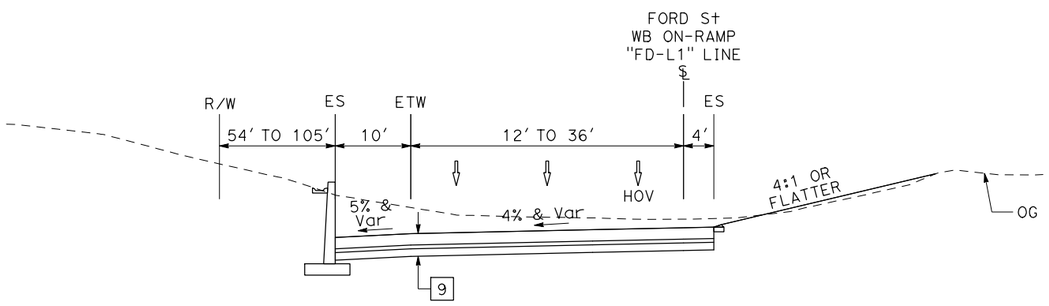

FORD St WB ON-RAMP

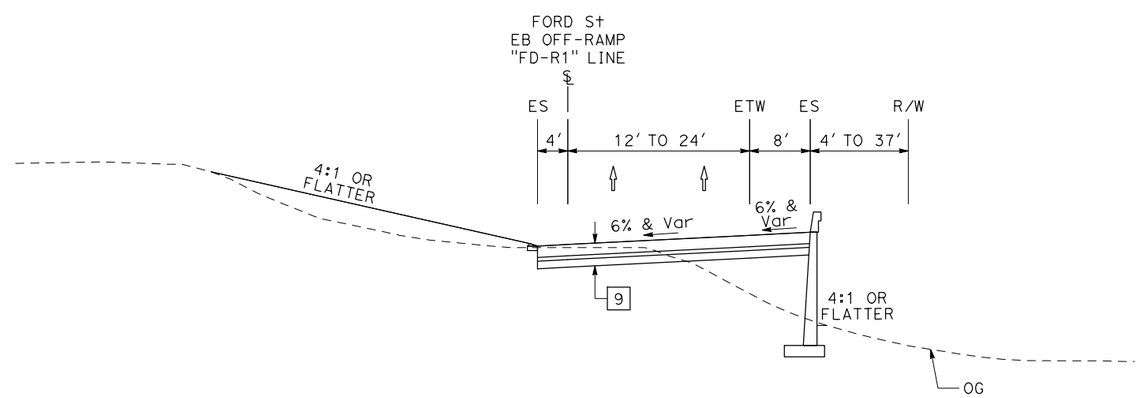

FORD St EB OFF-RAMP

I-10 CORRIDOR PROJECT
ALTERNATIVE 2 - HOV

TYPICAL CROSS SECTIONS

NO SCALE

X-34

STATE OF CALIFORNIA - DEPARTMENT OF TRANSPORTATION

Caltrans

CONSULTANT FUNCTIONAL SUPERVISOR

CALCULATED-DESIGNED BY

CHECKED BY

REVISED BY

DATE REVISED

LAST REVISION 00-00-00

DATE PLOTTED => 10/8/2015
TIME PLOTTED => 2:40:16 PM

Dist	COUNTY	ROUTE	POST MILES TOTAL PROJECT	SHEET No.	TOTAL SHEETS
08	SBd	10	4.7/R37.0		

REGISTERED CIVIL ENGINEER DATE

PLANS APPROVAL DATE

REGISTERED PROFESSIONAL ENGINEER
No.
Exp.
CIVIL
STATE OF CALIFORNIA

THE STATE OF CALIFORNIA OR ITS OFFICERS OR AGENTS SHALL NOT BE RESPONSIBLE FOR THE ACCURACY OR COMPLETENESS OF SCANNED COPIES OF THIS PLAN SHEET.

PARSONS
2201 DUPONT DRIVE
SUITE 200
IRVINE, CA 92612

SAN BERNARDINO
ASSOCIATED GOVERNMENTS
1170 W. 3RD STREET
SAN BERNARDINO, CA 92410

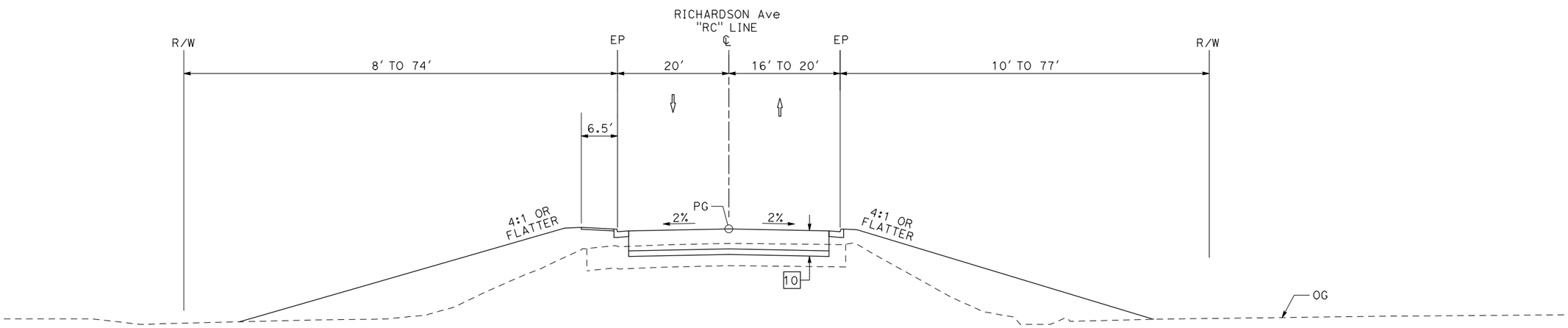

RICHARDSON Ave

I-10 CORRIDOR PROJECT
ALTERNATIVE 2 - HOV

TYPICAL CROSS SECTIONS

NO SCALE

X-35

STATE OF CALIFORNIA - DEPARTMENT OF TRANSPORTATION

Caltrans

CONSULTANT FUNCTIONAL SUPERVISOR

CALCULATED-DESIGNED BY

CHECKED BY

REVISED BY

DATE REVISED

LAST REVISION 00-00-00

DATE PLOTTED => 10/8/2015
TIME PLOTTED => 2:40:36 PM

Dist	COUNTY	ROUTE	POST MILES TOTAL PROJECT	SHEET No.	TOTAL SHEETS
08	SBd	10	4.7/R37.0		

REGISTERED CIVIL ENGINEER DATE

PLANS APPROVAL DATE

REGISTERED PROFESSIONAL ENGINEER
No.
Exp.
CIVIL
STATE OF CALIFORNIA

THE STATE OF CALIFORNIA OR ITS OFFICERS OR AGENTS SHALL NOT BE RESPONSIBLE FOR THE ACCURACY OR COMPLETENESS OF SCANNED COPIES OF THIS PLAN SHEET.

PARSONS
2201 DUPONT DRIVE
SUITE 200
IRVINE, CA 92612

SAN BERNARDINO
ASSOCIATED GOVERNMENTS
1170 W. 3RD STREET
SAN BERNARDINO, CA 92410

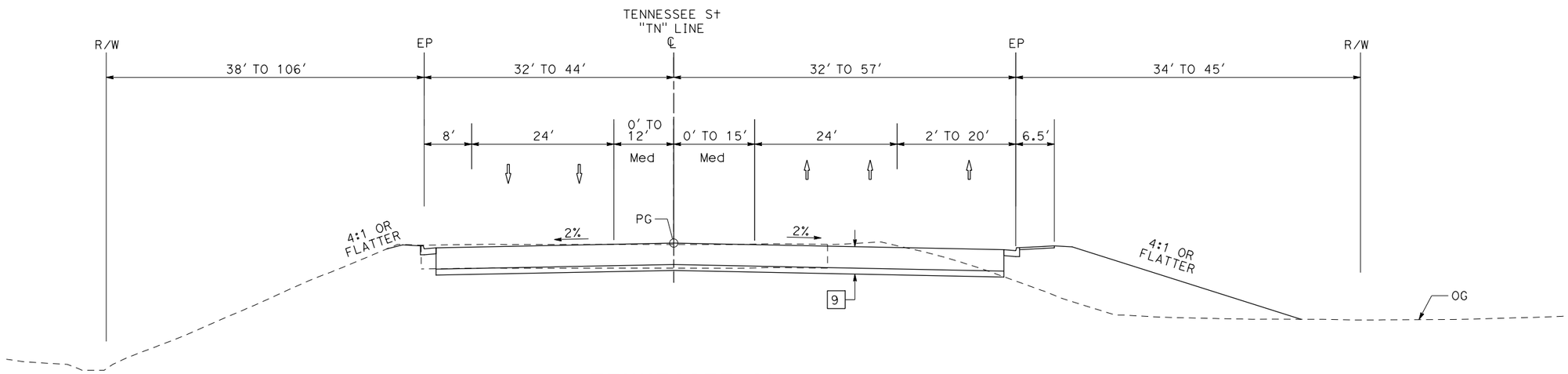

TENNESSEE St

I-10 CORRIDOR PROJECT
ALTERNATIVE 2 - HOV

TYPICAL CROSS SECTIONS

NO SCALE

X-36

REVISED BY | DATE REVISED

CALCULATED-DESIGNED BY | CHECKED BY

CONSULTANT FUNCTIONAL SUPERVISOR

STATE OF CALIFORNIA - DEPARTMENT OF TRANSPORTATION

Caltrans®

LAST REVISION 00-00-00 | DATE PLOTTED => 10/8/2015 TIME PLOTTED => 2:40:56 PM